Company: Joyoung International Trading Co.,Limited
Atten： Smiling
Mobile/WhatsApp/Wechat:+86 18050035902
Email: info@htechplc.com
Website: https://www.joyoungintl.com/

Bailey® infi 90®

E96-427

Instruction

Multi-Function Controller Termination Unit
(NTMF01)

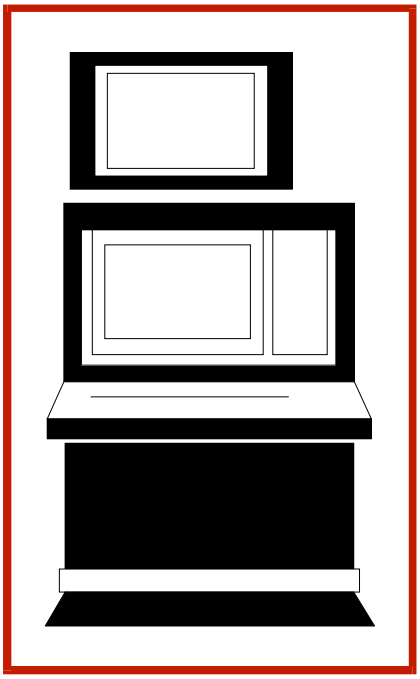

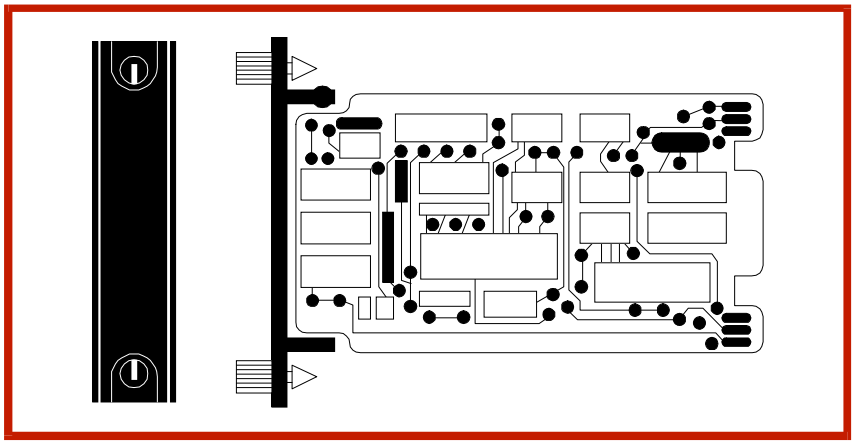

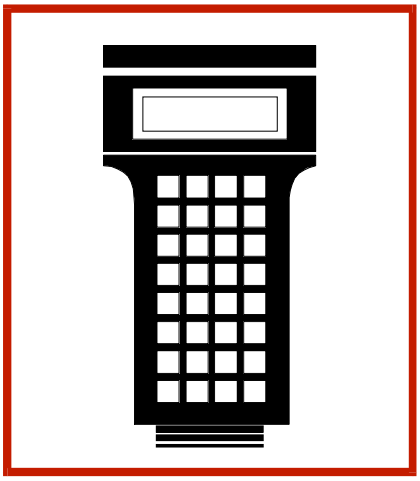

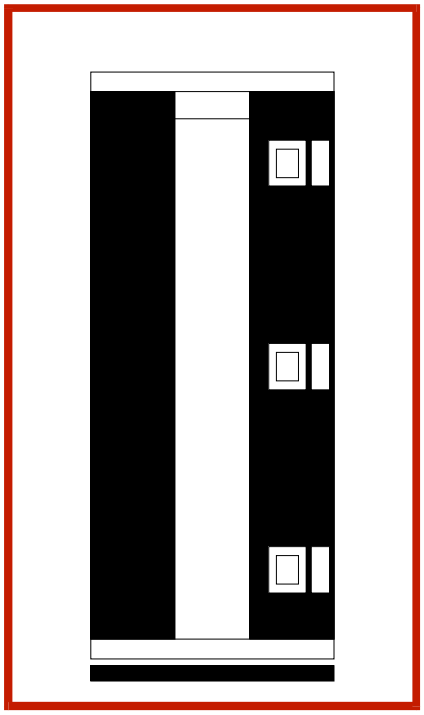

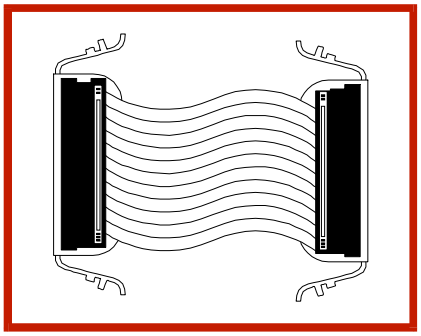

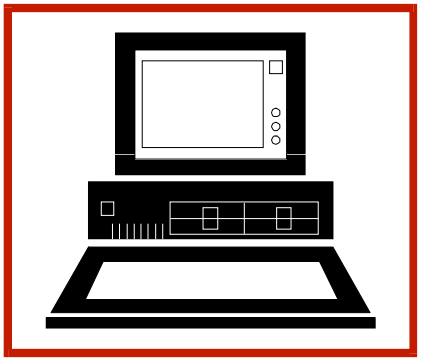

WARNING notices as used in this instruction apply to hazards or unsafe practices that could result in personal injury or death.

CAUTION notices apply to hazards or unsafe practices that could result in property damage.

NOTES highlight procedures and contain information that assists the operator in understanding the information contained in this instruction.

WARNING

INSTRUCTION MANUALS

DO NOT INSTALL, MAINTAIN, OR OPERATE THIS EQUIPMENT WITHOUT READING, UNDERSTANDING, AND FOLLOWING THE PROPER **Elsag Bailey** INSTRUCTIONS AND MANUALS; OTHERWISE, INJURY OR DAMAGE MAY RESULT.

RADIO FREQUENCY INTERFERENCE

MOST ELECTRONIC EQUIPMENT IS INFLUENCED BY RADIO FREQUENCY INTERFERENCE (RFI). CAUTION SHOULD BE EXERCISED WITH REGARD TO THE USE OF PORTABLE COMMUNICATIONS EQUIPMENT IN THE AREA AROUND SUCH EQUIPMENT. PRUDENT PRACTICE DICTATES THAT SIGNS SHOULD BE POSTED IN THE VICINITY OF THE EQUIPMENT CAUTIONING AGAINST THE USE OF PORTABLE COMMUNICATIONS EQUIPMENT.

POSSIBLE PROCESS UPSETS

MAINTENANCE MUST BE PERFORMED ONLY BY QUALIFIED PERSONNEL AND ONLY AFTER SECURING EQUIPMENT CONTROLLED BY THIS PRODUCT. ADJUSTING OR REMOVING THIS PRODUCT WHILE IT IS IN THE SYSTEM MAY UPSET THE PROCESS BEING CONTROLLED. SOME PROCESS UPSETS MAY CAUSE INJURY OR DAMAGE.

AVERTISSEMENT

MANUELS D'OPÉRATION

NE PAS METTRE EN PLACE, RÉPARER OU FAIRE FONCTIONNER L'ÉQUIPEMENT SANS AVOIR LU, COMPRIS ET SUIVI LES INSTRUCTIONS RÉGLEMENTAIRES DE **Elsag Bailey**. TOUTE NÉGLIGENCE À CET ÉGARD POURRAIT ÊTRE UNE CAUSE D'ACCIDENT OU DE DÉFAILLANCE DU MATÉRIEL.

PERTURBATIONS PAR FRÉQUENCE RADIO

LA PLUPART DES ÉQUIPEMENTS ÉLECTRONIQUES SONT SENSIBLES AUX PERTURBATIONS PAR FRÉQUENCE RADIO. DES PRÉCAUTIONS DEVRONT ÊTRE PRISES LORS DE L'UTILISATION DU MATÉRIEL DE COMMUNICATION PORTATIF. LA PRUDENCE EXIGE QUE LES PRÉCAUTIONS À PRENDRE DANS CE CAS SOIENT SIGNALÉES AUX ENDROITS VOULUS DANS VOTRE USINE.

PERTURBATIONS DU PROCÉDÉ

L'ENTRETIEN DOIT ÊTRE ASSURÉ PAR UNE PERSONNE QUALIFIÉE EN CONSIDÉRANT L'ASPECT SÉCURITAIRE DES ÉQUIPEMENTS CONTRÔLÉS PAR CE PRODUIT. L'AJUSTEMENT ET/OU L'EXTRACTION DE CE PRODUIT PEUT OCCASIONNER DES À-COUPS AU PROCÉDÉ CONTRÔLE LORSQU'IL EST INSÉRÉ DANS UNE SYSTÈME ACTIF. CES À-COUPS PEUVENT ÉGALEMENT OCCASIONNER DES BLESSURES OU DES DOMMAGES MATÉREILS.

NOTICE

The information contained in this document is subject to change without notice.

Elsag Bailey, its affiliates, employees, and agents, and the authors and contributors to this publication specifically disclaim all liabilities and warranties, express and implied (including warranties of merchantability and fitness for a particular purpose), for the accuracy, currency, completeness, and/or reliability of the information contained herein and/or for the fitness for any particular use and/or for the performance of any material and/or equipment selected in whole or part with the user of/or in reliance upon information contained herein. Selection of materials and/or equipment is at the sole risk of the user of this publication.

This document contains proprietary information of Elsag Bailey, Elsag Bailey Process Automation, and is issued in strict confidence. Its use, or reproduction for use, for the reverse engineering, development or manufacture of hardware or software described herein is prohibited. No part of this document may be photocopied or reproduced without the prior written consent of Elsag Bailey.

Preface

Termination units provide a connection from the plant equipment to the INFI 90® process modules. The NTMF01 Multi-Function Controller Termination Unit terminates a multi-function controller, INFI-NET® to computer transfer module, Plant Loop to Plant Loop transfer module or Plant Loop to computer transfer module. The NTMF01 Multi-Function Controller Termination Unit provides a termination point for two separate RS-232-C ports plus a serial link to connect a control station through an NTCS04 Control I/O Termination Unit. This product instruction explains how to install and use the NTMF01 Multi-Function Termination Unit.

® INFI 90 is a registered trademark of Elsag Bailey Process Automation.
® INFI-NET is a registered trademark of Elsag Bailey Process Automation.

List of Effective Pages

Total number of pages in this manual is 51, consisting of the following:

Page No.	Change Date
Preface	Original
List of Effective Pages	Original
iii through vii	Original
1-1 through 1-6	Original
2-1 through 2-15	Original
3-1	Original
4-1 through 4-3	Original
5-1	Original
A-1 through A-3	Original
B-1 through B-2	Original
C-1 through C-2	Original
D-1 through D-3	Original
E-1 through E-3	Original
F-1 through F-3	Original
Index-1 through Index-2	Original

When an update is received, insert the latest changed pages and dispose of the superseded pages.

NOTE: On an update page, the changed text or table is indicated by a vertical bar in the outer margin of the page adjacent to the changed area. A changed figure is indicated by a vertical bar in the outer margin next to the figure caption. The date the update was prepared will appear beside the page number.

Safety Summary

GENERAL WARNINGS	**Equipment Environment** All components, whether in transportation, operation or storage, must be in a noncorrosive environment. **Electrical Shock Hazard During Maintenance** Disconnect power or take precautions to insure that contact with energized parts is avoided when servicing. **Special Handling** This module uses Electrostatic Sensitive Devices(ESD).

SPECIFIC CAUTIONS	We strongly recommend that you turn cabinet power off before doing any termination unit wiring. Failure to do so could result in equipment damage. Do not apply power until you verify all wire connections. Remove modules from their assigned module mounting unit slots before installing or removing a cable connected to that slot. Failure to do so could result in damage to the module.

Sommaire de Sécurité

AVERTISSEMENTS D'ORDRE GÉNÉRAL	**Environnement de l'équipement** Ne pas soumettre les composants à une atmosphère corrosive lors du transport, de l'entreposage ou l'utilisation. **Possibilité de chocs électriques durant l'entretien** Débrancher l'alimentation ou prendre les précautions pour éviter tout contact avec des composants sous tension durant l'entretien. **Precautions de Manutention** Ce module contient des composantes sensibles aux decharges slectro-statiques.

ATTENTIONS D'ORDRE SPÉCIFIQUE	Il est fortement recommande, de debrancher l'alimentation electrique du cabinet avant d'effectuer toute connexion aux cartes de raccordement du chassis. Des dommages aux equipements pourraient survenir dans le cas contraire. Ne pas rebrancher l'alimentation avant que toutes les connexions aient ete verifiees. Retirer le module de son emplacement dans le chassis de montage des modules avant d'installer ou de retirer un cable assigne a cet emplacement. Un manquement a cette procedure pourrait endommager le module.

Table of Contents

Page

SECTION 1 - INTRODUCTION 1-1
- OVERVIEW 1-1
- INTENDED USER 1-3
- HARDWARE DESCRIPTION 1-3
- FEATURES 1-3
- INSTRUCTION CONTENT 1-4
- HOW TO USE THIS MANUAL 1-4
- GLOSSARY OF TERMS AND ABBREVIATIONS 1-4
- REFERENCE DOCUMENTS 1-5
- NOMENCLATURE 1-5
- SPECIFICATIONS 1-6

SECTION 2 - INSTALLATION 2-1
- INTRODUCTION 2-1
- SPECIAL HANDLING 2-1
- UNPACKING AND INSPECTION 2-2
- SETUP/PHYSICAL INSTALLATION 2-2
  - Dipshunt Configuration for DTE or DCE Devices 2-3
  - Dipshunt Configuration for a Mainframe Computer 2-3
  - Dipshunt Configuration for the INPPT01 Module 2-3
  - Sequential Events Recorder 2-4
- INSTALLING THE TERMINATION UNIT 2-5
  - Installing the Fuse 2-5
  - Mounting the Termination Unit 2-6
- CABLE INSTALLATION 2-6
  - Termination Unit Cables 2-6
  - RS-232-C Communication Cable 2-8
  - Serial Extension Cable 2-9
- POWER WIRING 2-14

SECTION 3 - MAINTENANCE 3-1
- INTRODUCTION 3-1
- MAINTENANCE SCHEDULE 3-1

SECTION 4 - REPAIR/REPLACEMENT PROCEDURES 4-1
- INTRODUCTION 4-1
- FUSE REPLACEMENT 4-1
- TERMINATION UNIT REPLACEMENT 4-1

SECTION 5 - SUPPORT SERVICES 5-1
- INTRODUCTION 5-1
- REPLACEMENT PARTS AND ORDERING INFORMATION 5-1
- TRAINING 5-1
- TECHNICAL DOCUMENTATION 5-1

APPENDIX A - IMMFC03 MULTI-FUNCTION CONTROLLER A-1
- INTRODUCTION A-1

APPENDIX B - IMMFC04 MULTI-FUNCTION CONTROLLER B-1
- INTRODUCTION B-1

APPENDIX C - IMMFC05 MULTI-FUNCTION CONTROLLER C-1
- INTRODUCTION C-1

Table of Contents (continued)

Page

APPENDIX D - INPPT01 PLANT LOOP TO PLANT LOOP TRANSFER MODULE D-1
INTRODUCTION D-1

APPENDIX E - INPCT01 PLANT LOOP TO COMPUTER TRANSFER MODULE E-1
INTRODUCTION E-1

APPENDIX F - INICT01 INFI-NET TO COMPUTER TRANSFER MODULE F-1
INTRODUCTION F-1

List of Tables

No.	Title	Page
1-1.	Glossary of Terms and Abbreviations	1-4
1-2.	Reference Documents	1-5
1-3.	Nomenclature	1-5
1-4.	NTMF01 Termination Unit Specifications	1-6
2-1.	TMF Cable Applications, Connections and Length Requirements	2-13
3-1.	Maintenance Schedule	3-1
4-1.	Recommended Spare Parts List	4-1
A-1.	IMMFC03 Dipswitch U72 Option Settings	A-1
A-2.	IMMFC03 Dipswitch U72 Special Operation Settings	A-2
A-3.	IMMFC03 Dipswitch U73 Baud Rate Settings	A-3
A-4.	Example IMMFC03 Dipswitch U75 Module Address Settings	A-3
B-1.	IMMFC04 Dipswitch SW3 Module Address Settings	B-1
B-2.	IMMFC04 Dipswitch SW4 Options Settings	B-2
B-3.	IMMFC04 Dipswitch SW4 Special Operations Settings	B-2
C-1.	Example IMMFC05 Dipswitch SW3 Module Address Settings	C-1
C-2.	IMMFC05 Dipswitch SW4 Option Settings	C-2
C-3.	IMMFC05 Dipswitch SW4 Special Operations Settings	C-2
D-1.	INPPT01 Dipswitch U72 Option Settings	D-1
D-2.	INPPT01 Dipswitch U73 Baud Rate Settings	D-2
D-3.	Example INPPT01 Dipswitch U75 Loop Address Settings	D-3
E-1.	NIPCT01 Dipswitch U72 Option Settings	E-1
E-2.	INPCT01 Dipswitch U73 Baud Rate Settings	E-2
E-3.	Example INPCT01 Dipswitch U75 Loop Address Settings	E-3
F-1.	INICT01 Dipswitch U72 Option Settings	F-1
F-2.	INICT01 Dipswitch U73 Baud Rate Settings	F-2
F-3.	INICT01 Dipswitch U75 Diagnostic Settings	F-3

List of Figures

No.	Title	Page
1-1.	Example Redundant TMF Application	1-1
1-2.	Example Plant Loop to Computer Interface Module Application	1-2
1-3.	Example Plant Loop to Plant Loop Application	1-3
2-1.	TMF Unit Connector Assignments and Dipshunt Locations	2-3
2-2.	Dipshunt Configuration for Direct Connection to Host Computer (IMMFC03 and ICT Modules)	2-4
2-3.	Dipshunt Configuration for Direct Connection to Modem (MFC and ICT Modules)	2-5
2-4.	Dipshunt Configuration for Diagnostic Terminal (MFC and ICT Modules)	2-6
2-5.	Dipshunt Configuration for Direct Connection to Mainframe Computer (ICT Module)	2-7
2-6.	Dipshunt Configuration for PPT Module Acting as DTE (Requires Modem or Other DCE)	2-8
2-7.	Dipshunt Configuration for Direct Connection of Local PPT Module Acting as DTE	2-9
2-8.	Dipshunt Configuration for Direct Connection of Remote PPT Module Acting as DCE	2-10
2-9.	Dipshunt Configuration for Diagnostic Terminal (PPT Module)	2-11
2-10.	Dipshunt Configuration for Rochester 3800 and ESA Control SER-740	2-11
2-11.	Dipshunt Configuration for Rochester ISM	2-12
2-12.	Mounting and Securing the Termination Unit on the Field Termination Panel	2-12
2-13.	Cable Connections with Redundant MFC Modules, Serial Link to a Station and Serial Ports	2-13
2-14.	DB-25 Pin Assignments and RS-232-C Signals	2-14
A-1.	IMMFC03 Module CPU Board Layout	A-1
B-1.	IMMFC04 Module Layout	B-1
C-1.	IMMFC05 Module Layout	C-1
D-1.	INPPT01 Module CPU Board Layout	D-1
E-1.	INPCT01 Module CPU Board Layout	E-1
F-1.	INPCT01 Module CPU Board Layout	F-1

SECTION 1 - INTRODUCTION

OVERVIEW

The NTMF01 Multi-Function Controller Termination Unit (TMF) terminates two RS-232-C ports for the IMMFC03 Multi-Function Controller, INICT01 INFI-NET to Computer Transfer Module, INPPT01 Plant Loop to Plant Loop Transfer Module and INPCT01 Plant Loop to Computer Transfer Module. When terminating an IMMFC03 module (or redundant IMMFC03 modules), it enables the IMMFC03 module to communicate to a computer, terminal, printer or sequential events recorder through the serial ports (see Figure 1-1). It also provides a serial link for an NDCS03 Digital Control Station or

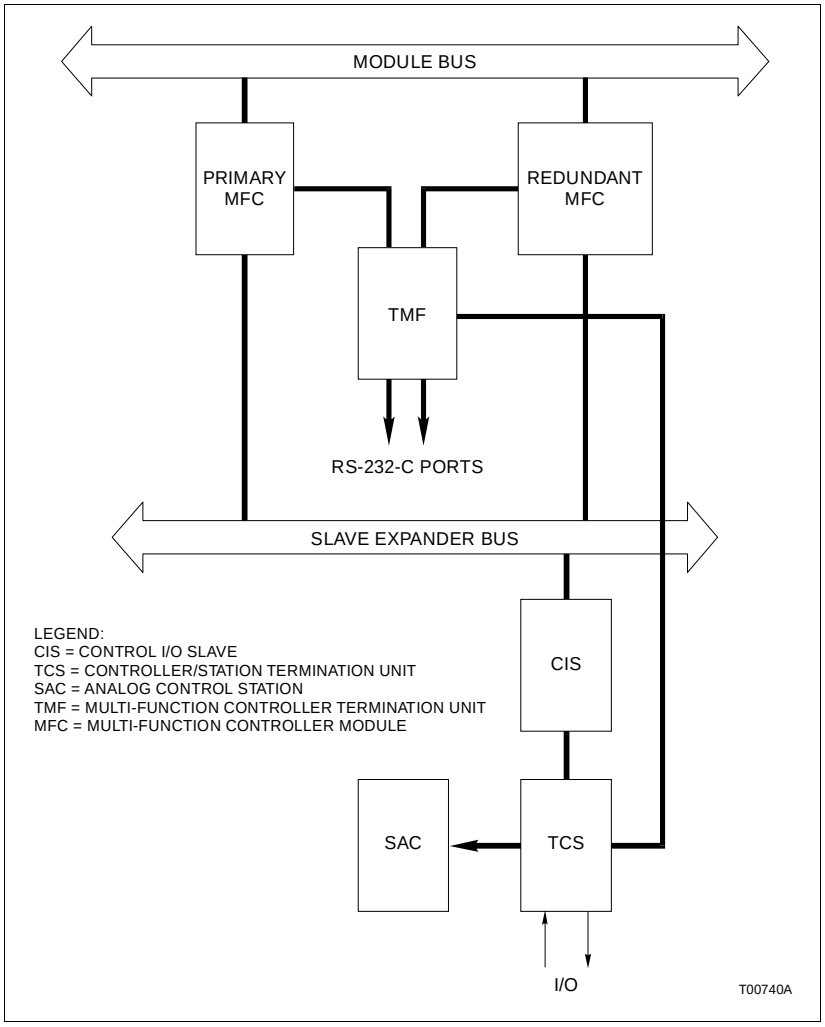

Figure 1-1. Example Redundant TMF Application

IISAC01 Analog Control Station through an NTCS04 Control I/O Termination Unit. The IMMFC04 and IMMFC05 Multi-Function Controllers use the NTMF01 termination unit to terminate a station link an7d connect to a redundant controller.

The INICT01 INFI-NET to Computer Interface Module is part of the INICI01 INFI-NET to Computer Interface. The INPCT01 Plant Loop to Computer Interface Module is part of the INPCI02 Plant Loop to Computer Interface. Figure 1-2 shows an example Plant Loop to computer interface application. The two modules use the TMF termination unit to terminate the connection of a mainframe, computer, terminal or modem to the INFI-NET or Plant Loop communication networks respectively. The INPPT01 Plant Loop to Plant Loop Transfer Module is part of an INPPR01 Plant Loop to Plant Loop Remote Interface. Figure 1-3 shows an example Plant Loop to Plant Loop interface module application. Each PPT (one local, one remote) module connects to the other through the NTMF01 termination unit.

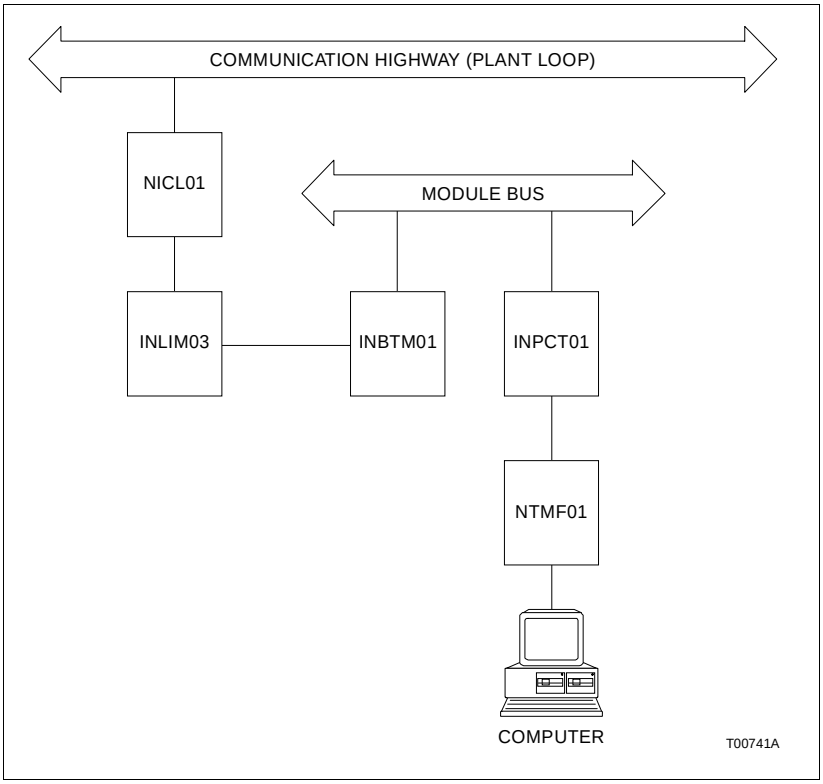

Figure 1-2. Example Plant Loop to Computer Interface Module Application

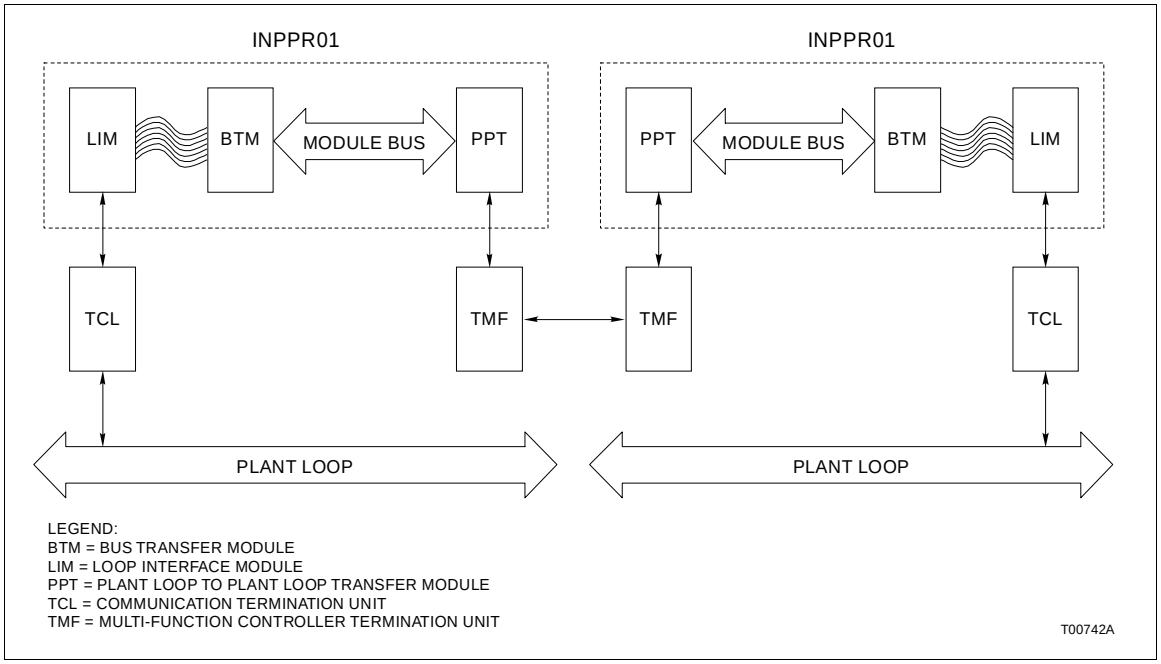

Figure 1-3. Example Plant Loop to Plant Loop Application

INTENDED USER

Anyone who installs, operates and maintains the NTMF01 Multi-Function Controller Termination Unit should read and understand this manual before placing the termination unit into service. Installation and troubleshooting require a technician or engineer with electrical experience and a working knowledge of the RS-232-C standard.

HARDWARE DESCRIPTION

The multi-function termination unit is a seven-by-seven inch square printed circuit board. It mounts on the NFTP01 Field Termination Panel inside an INFI 90 cabinet. The board contains:

- Two DB-25 connectors.
- Relays.
- Connector sockets.
- Dipshunts.
- Fuse.
- Light emitting diodes (LED).
- Faston connectors for power and DC common.

FEATURES

The multi-function controller termination unit (TMF) provides a place to connect two RS-232-C cables with DB-25 connec-

tors. Dipshunts allow either port of the termination unit to be configured to operate as DTE or DCE devices. This feature allows the termination unit to terminate a number of computers or terminals. One serial link connection on the termination unit enables a multi-function controller module to communicate to an NDCS03 Digital Control Station or IISAC01 Analog Control Station.

INSTRUCTION CONTENT

This manual has five sections and six appendices.

Introduction Provides an overview of the termination unit.

Installation Explains the physical installation, wiring and cable requirements, dipshunt settings and handling of the termination unit.

Maintenance Contains a maintenance schedule.

Repair/Replacement Procedure Explains how to replace the fuse or the termination unit.

Support Services Explains how to order parts and other services available from Bailey Controls Company.

Appendices Briefly discuss the modules that use the termination unit and provide a cross-reference of dipswitch and jumper settings for those modules.

HOW TO USE THIS MANUAL

Read this manual through in sequence. Read the installation section thoroughly. Do the steps in order. Complete all steps in the installation section before using the termination unit. Refer to the Table of Contents or Index to find specific information after the unit is operating.

GLOSSARY OF TERMS AND ABBREVIATIONS

Table 1-1 lists definitions of the terms and abbreviations used in this instruction.

Table 1-1. Glossary of Terms and Abbreviations

Term	Definition
DCE	Data communication equipment or data circuit-terminating equipment. Equipment that establishes and terminates a communication link between two devices. In RS-232-C communication systems,, the DCE nomenclature indicates the signals that appear at specified cable connection contacts. A modem is an example of this type of device.
Dipshunt	Dual in-line package with shorting straps.

Table 1-1. Glossary of Terms and Abbreviations (continued)

Term	Definition
DTE	Data terminal equipment. Equipment comprising the data source,, data sink or both that provides the communication control function. In RS-232-C communication systems,, the DTE nomenclature indicates the signals that appear at specified cable connection contacts. Terminals and printers are examples of this type of device.
FTP	Field termination panel. A panel inside the INFI 90 cabinet on which to mount termination units.
MMU	Module mounting unit. A card cage that provides electrical and communication support for INFI 90/ Network® modules.

REFERENCE DOCUMENTS

Table 1-2 lists the documents referenced in this instruction.

Table 1-2. Reference Documents

Number	Description
I-E93-902-1	NDCS03 Digital Control Station
I-E96-117	IISAC01 Analog Control Station
I-E96-211	IMMFC03 Multi-Function Controller Module
I-E96-212	IMMFC04 Multi-Function Controller Module
I-E96-213	IMMFC05 Multi-Function Controller Module
I-E96-442	NTCS04 Controller/Station Termination Unit
I-E96-500	Site Planning and Preparation
I-E96-601	INFI-NET Communications Modules
I-E96-621	INPCI02 Plant Loop to Computer Interface
I-E96-624	INPPR01 Plant Loop to Plant Loop Remote Interface

NOMENCLATURE

Table 1-3 is a list of related hardware.

Table 1-3. Nomenclature

Nomenclature	Description
IISAC01	Analog control station
IMMFC03 IMMFC04 IMMFC05	Multi-function controller module
INICT01	INFI-NET to computer transfer module
INPCT01	Plant Loop to computer transfer module

® Network 90 is a registered trademark of Elsag Bailey Process Automation.

Table 1-3. Nomenclature (continued)

Nomenclature	Description
INPPT01	Plant Loop to Plant Loop transfer module
NDCS03	Digital control station
NFTP01	Field termination panel
NKSE01	Station serial extension cable (PVC)
NKSE11	Station serial extension cable (non-PVC)
NKTU01	Termination unit cable (PVC)
NKTU11	Termination unit cable (non-PVC)
NTCS04	Control/station termination unit

SPECIFICATIONS

Refer to Table 1-4 for the specifications of the NTMF01 termination unit.

Table 1-4. NTMF01 Termination Unit Specifications

Property	Characteristic/Value
Power Requirements	+24 VDC 160 mA current consumption,, maximum (LED consumes 10 mA)
Communication	2 RS-232-C serial ports 1 control station serial link
Cable Insulation Specifications:	
PVC (UL Rating CL2)	80°C (176°F) at 300 V|
Non-PVC (UL Rating PLTC)	90°C (194°F) at 300 V
Mounting	Screw mounts on the field termination panel
Environmental	
Electromagnetic/Radio Frequency Interference	Values are not available at this time. Keep cabinet doors closed. Do not use communication equipment any closer than 2 meters from the cabinet.
Operating Temperature	0° to 70°C (32° to 158°F)
Relative Humidity	5% to 90% (±5%) up to 70°C (158°F) (noncondensing)
Altitude	Sea level to 3 km (1.86 mi)
Air Quality	Bailey equipment should be operated and stored in a noncorrosive environment.
Cooling Requirements	No cooling necessary when used in Bailey cabinets and operated within stated environmental limits.
Certification	All termination units are CSA certified as process control equipment for use in an ordinary (nonhazardous) location.

SPECIFICATIONS SUBJECT TO CHANGE WITHOUT NOTICE.

SECTION 2 - INSTALLATION

INTRODUCTION

This section lists the steps to properly install the NTMF01 Multi-Function Controller Termination Unit (TMF). The installation procedure includes physical installation, dipshunt configuration, cable connection, power wiring and handling. To properly install the TMF termination unit do the steps in this section in the order they appear.

SPECIAL HANDLING

Observe these steps when handling electronic circuitry:

NOTE: Always use Bailey's field static kit (part number 1948385A1 - consisting of two wrist straps, ground cord assembly, alligator clip, and static dissipative work surface) when working with the modules. The kit grounds a technician and the static dissipative work surface to the same ground point to prevent damage to the modules by electrostatic discharge.

1. ***Use Static Shielding Bag.*** Keep the modules in the static shielding bag until you are ready to install them in the system. Save the bag for future use.

2. ***Ground Bag Before Opening.*** Before opening a bag containing an assembly with CMOS devices, touch it to the equipment housing or a ground to equalize charges.

3. ***Avoid Touching Circuitry.*** Handle assemblies by the edges; avoid touching the circuitry.

4. ***Avoid Partial Connection of CMOS Device.*** Verify that all devices connected to the modules are properly grounded before using them.

5. ***Ground Test Equipment***.

6. ***Use an Antistatic Field Service Vacuum.*** Remove dust from the module if necessary.

7. ***Use a Grounded Wrist Strap.*** Connect the wrist strap to the appropriate grounding plug on the power entry panel. The grounding plug on the power entry panel is connected to the earth grounding electrode system through the AC safety ground.

8. ***Do Not Use Lead Pencils to Set Dipswitches.*** To avoid contamination of dipswitch contacts that can result in unnecessary circuit board malfunction, do not use a lead pencil to set a dipswitch.

UNPACKING AND INSPECTION

1. Examine the hardware immediately for shipping damage.

2. Notify the nearest Bailey Controls Company sales office of any such damage.

3. File a claim for any damage with the transportation company that handled the shipment.

4. Use the original packing material and container to store the hardware.

5. Store the hardware in an environment of good air quality, free from temperature and moisture extremes.

SETUP/PHYSICAL INSTALLATION

This section explains how to configure and install the termination unit. You must configure the dipshunts before installing the termination unit. There are four dipshunts, two for each RS-232-C port. These dipshunts define the active handshake lines. Each port can be configured as a DTE or DCE device. Only port two can terminate a diagnostic terminal. The termination unit can interface with:

- Devices.

  Printer.
  Sequence of events recorder.
  IBM® PC.
  COMPAQ® and compatible computers.

- Terminals.

  VT1XX.
  ADM3.
  VISUAL 50.
  WYSE (WY50).
  TELEVIDEO.
  FALCO.

NOTES:

1. The IMMFC04 and IMMFC05 Multi-Function Controller Modules use the termination unit for its link to control stations and for connecting a redundant MFC module. They do not have serial communication capabilities. Therefore, no dipshunts are required when terminating the IMMFC04 or IMMFC05 modules.

2. Only the IMMFC03 Multi-Function Controller Module drives the TMF LEDs. The LEDs will not light when the termination unit is used with an IMMFC04 or IMMFC05 Multi-Function Controller Module.

® IBM is a registered trademark of International Business Machines Corporation.
® COMPAQ is a registered trademark of COMPAQ Corporation.

Dipshunt Configuration for DTE or DCE Devices

Configure dipshunts XU1/XU2 and XU3/XU4 so that their respective ports operate as DTE or DCE devices. Port two can be used to interface a diagnostic terminal. Figure 2-1 shows the connector assignments and dipshunt location on the termination unit. Install the appropriately cut dipshunts using Figures 2-2 through 2-4.

NOTE: The TMF dipshunt settings shown in Figures 2-2 through 2-4 apply to the IMMFC03 and INICT01 modules. Figure 2-5 applies only to the INICT01 and INPCT01 modules. Figures 2-6 through 2-7 show the dipshunt settings required when using the termination unit to terminate an INPPT01 module.

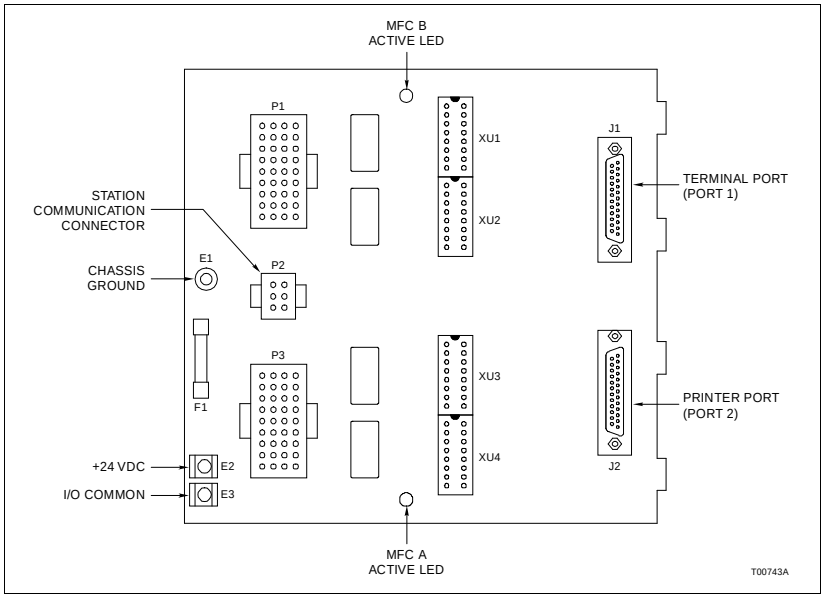

Figure 2-1. TMF Unit Connector Assignments and Dipshunt Locations

Dipshunt Configuration for a Mainframe Computer

The INICT01 and INPCT01 modules can interface to a mainframe computer (MODCOMP or VAXstation™). To set up the termination unit to terminate a mainframe, see Figure 2-5 and install the appropriate set of dipshunts (XU1/XU2 and XU3/XU4) as shown.

Dipshunt Configuration for the INPPT01 Module

When the termination unit is used to terminate an INPPT01 module, use the dipshunt settings shown in Figures 2-6 through 2-8. To install the dipshunts:

1. If connecting a local plant loop (DTE) to a remote plant loop (DTE) through a modem or microwave link (DCE), use the dipshunt settings shown in Figure 2-6. Set the IMF termination

™ VAXstation is a trademark of Digital Equipment Corporation.

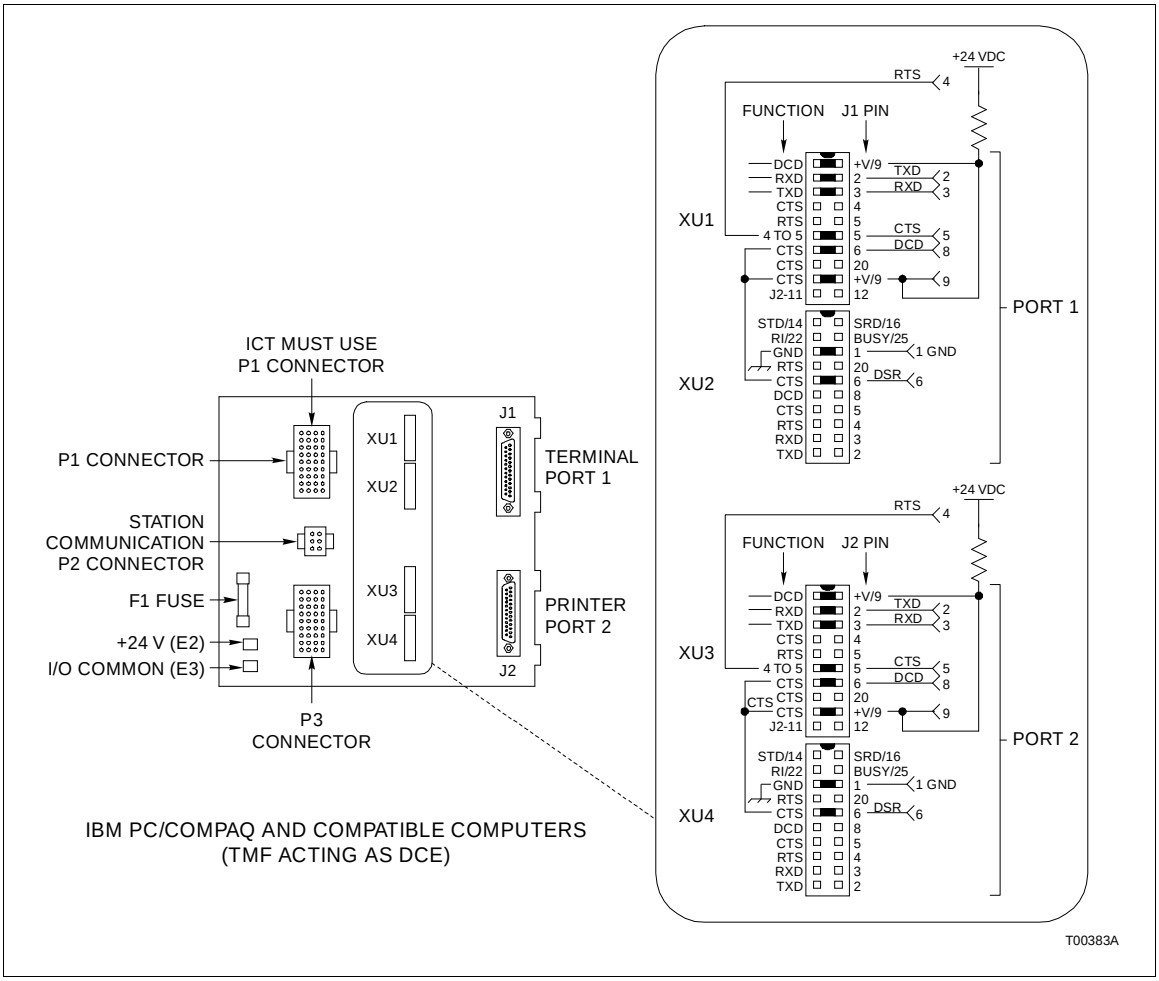

Figure 2-2. Dipshunt Configuration for Direct Connection to Host Computer (IMMFC03 and ICT Modules)

unit for both the local and remote PPT modules to the dipshunt settings shown.

2. If connecting a local Plant Loop (DTE) directly to a remote Plant Loop (DCE) via a cable, use the dipshunt settings shown in Figure 2-7 (local) and Figure 2-8 (remote).

3. To connect a diagnostic terminal to the INPPR01 module, use port one on the TMF termination unit and the dipshunt settings shown in Figure 2-9.

Sequential Events Recorder

The IMF termination module interfaces with the Rochester 3800, Rochester ISM and ESA Controls SER-740 sequential

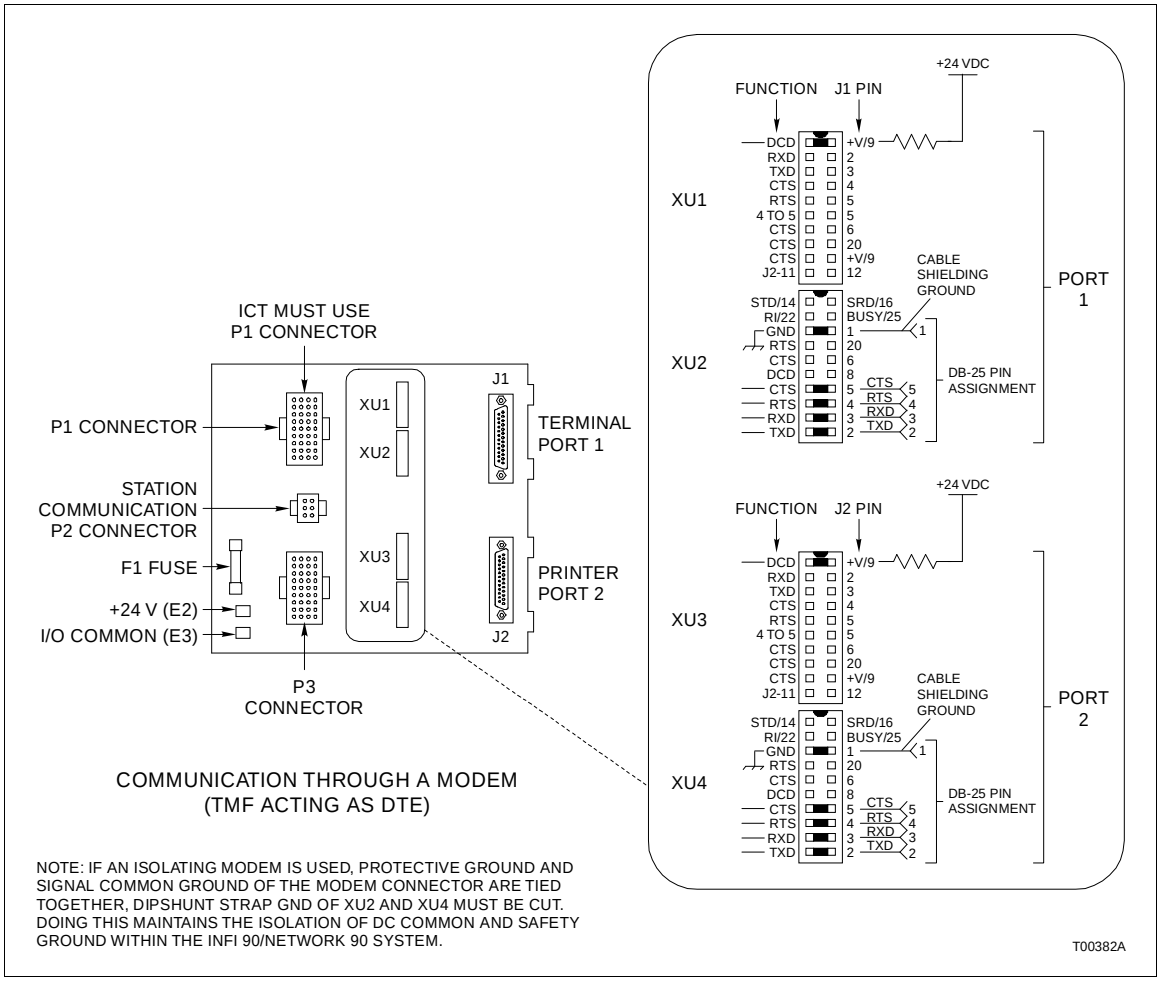

Figure 2-3. Dipshunt Configuration for Direct Connection to Modem (MFC and ICT Modules)

events recorders. See Figures 2-10 and 2-11 for dipshunt configurations.

INSTALLING THE TERMINATION UNIT

The termination unit is ready to install if the dipshunts are properly installed and configured, and the fuse is in place.

Installing the Fuse

You must verify that the fuse is installed and configure the dipshunts before installing the termination unit.There are four dipshunts, two for each RS-232-C port.

Bailey ships a 0.25 amp, 250 volt fuse (Bailey part number 194776A12500) with each termination unit. If this fuse is missing, install a fuse in the fuse holder (F1). Figure 2-1 shows the location of F1 on the termination unit circuit board.

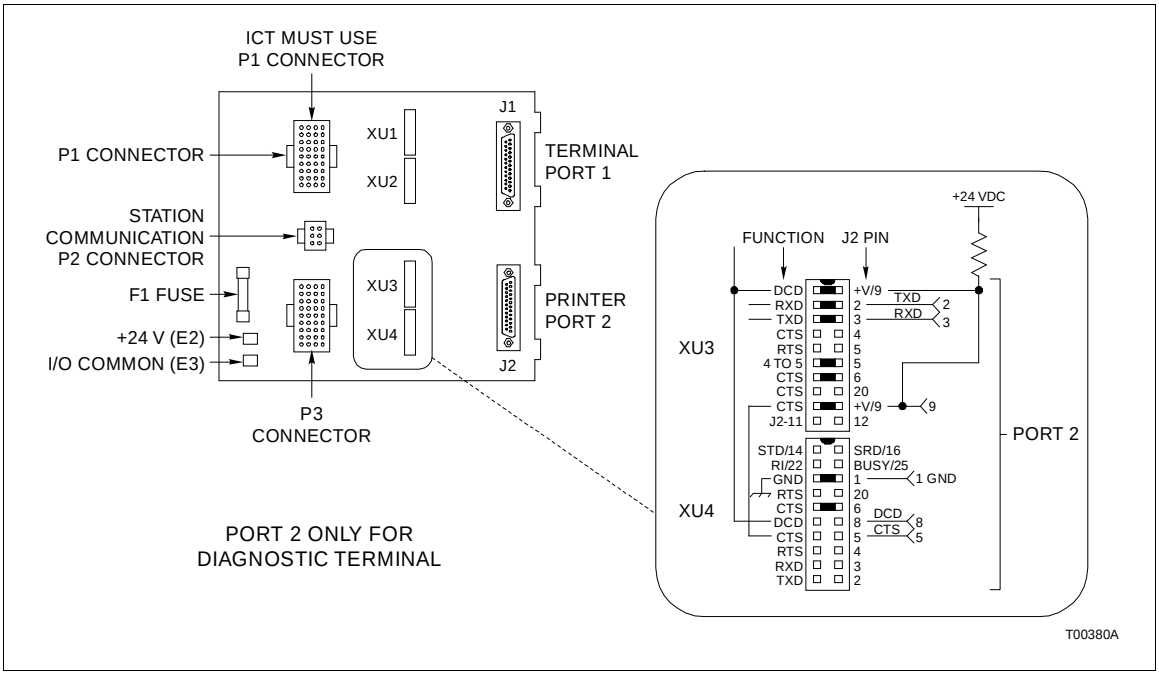

Figure 2-4. Dipshunt Configuration for Diagnostic Terminal (MFC and ICT Modules)

Mounting the Termination Unit

To mount the termination unit:

1. Insert the tabs of the circuit board into the proper slots of the termination panel standoff as shown in Figure 2-12 and slide the circuit board into position.

2. Secure the termination unit circuit board to the field termination panel with two number ten self-tapping screws (see Figure 2-12).

3. Connect the chassis ground by installing a number ten self-tapping screw and external star washer in the location (E1) shown in Figure 2-1.

CABLE INSTALLATION

After mounting the termination unit to the field termination panel, install the termination cables.

Termination Unit Cables

Table 2-1 lists the cables, their application, connector assignments and maximum length. Figure 2-13 shows a diagram of

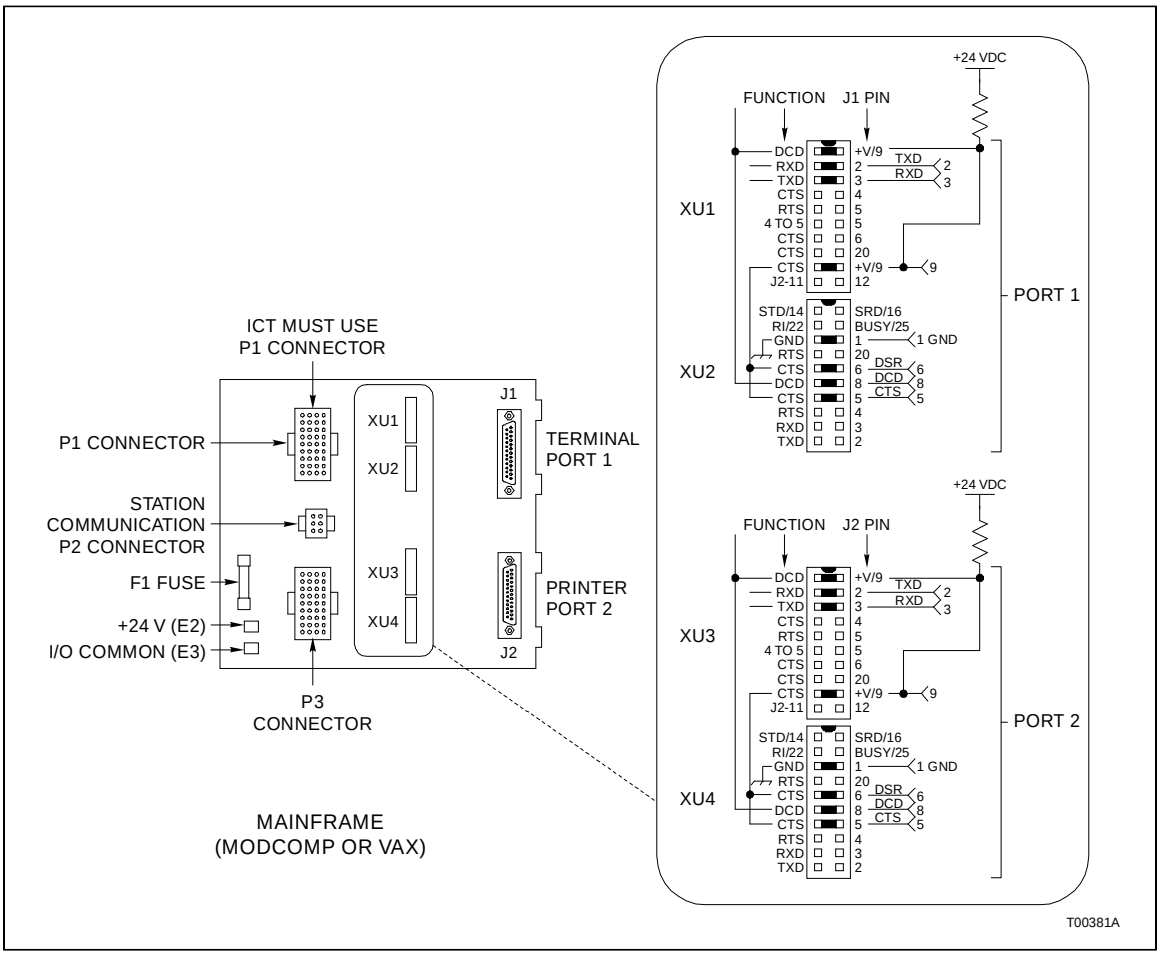

Figure 2-5. Dipshunt Configuration for Direct Connection to Mainframe Computer (ICT Module)

cable connections to redundant MFC modules and a station link. To install the termination unit cable:

> **NOTE:** If the module is already installed, pull the module away from the MMU backplane several inches. The card edge of the module must not come into contact with the card edge connector of the termination cable while installing the cable. After installing the cable, slide the module into the MMU so that the card edge seats within the card edge connector. Refer to the product instructions for the modules for more information about the installation or removal of those modules.

1. Install one end of the appropriate cable in the module mounting unit (MMU) backplane slot assigned to the module.

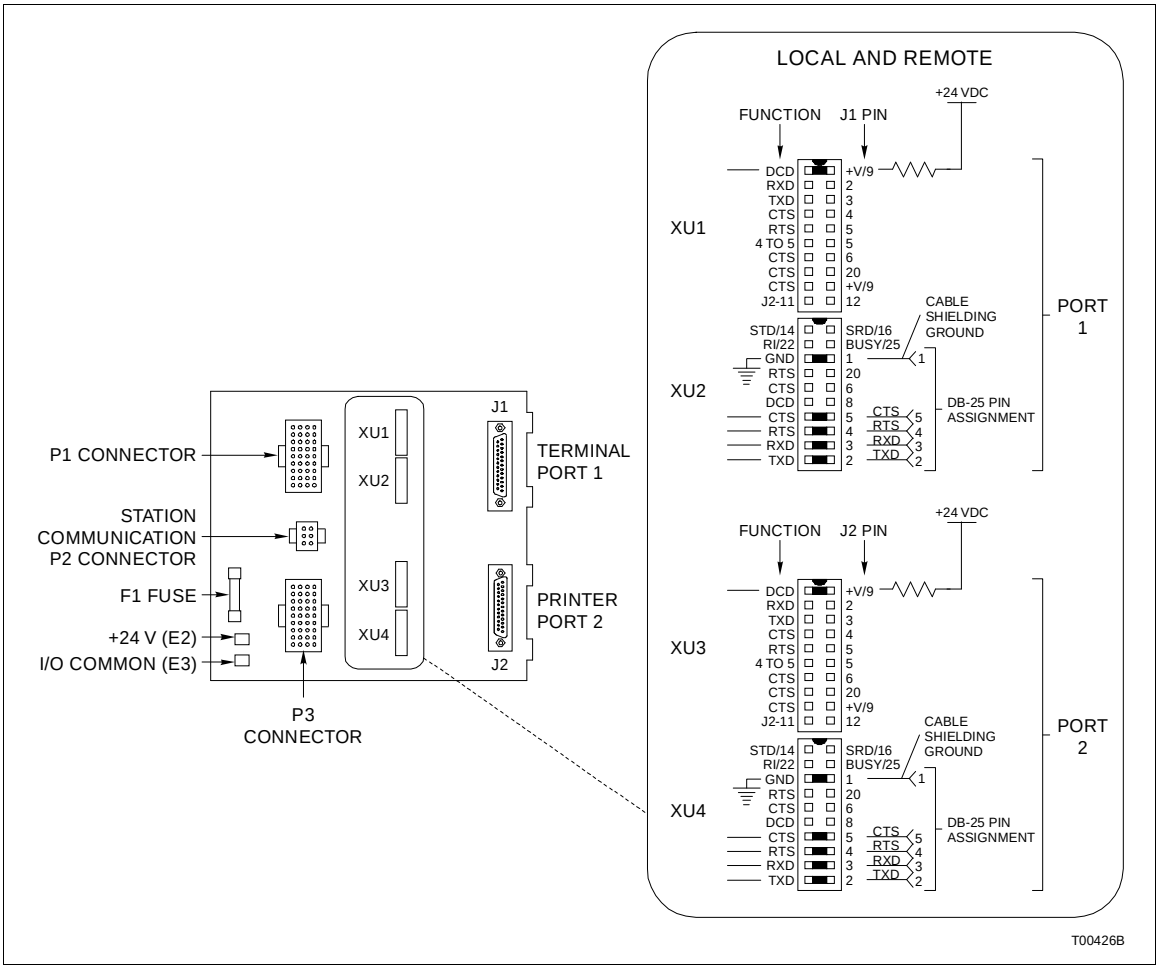

Figure 2-6. Dipshunt Configuration for PPT Module Acting as DTE (Requires Modem or Other DCE)

2. Insert the other end of the cable into P1 or P3 of the termination unit. See Figure 2-1 for the location of P1 and P3 on the TMF circuit board.

NOTE: The INICT01 module must always have its termination cable connected to P1 of the termination unit.

RS-232-C Communication Cable

The RS-232-C communication cable connects the termination unit to a computer, terminal, printer or modem (see Figure 2-13). Table 2-1 lists the requirements of the RS-232-C cable, its application, connector assignments and length restrictions. Figure 2-14 shows the DB-25 connector pin assignments. To install the RS-232-C cable:

1. Turn off power to host computer or terminal.

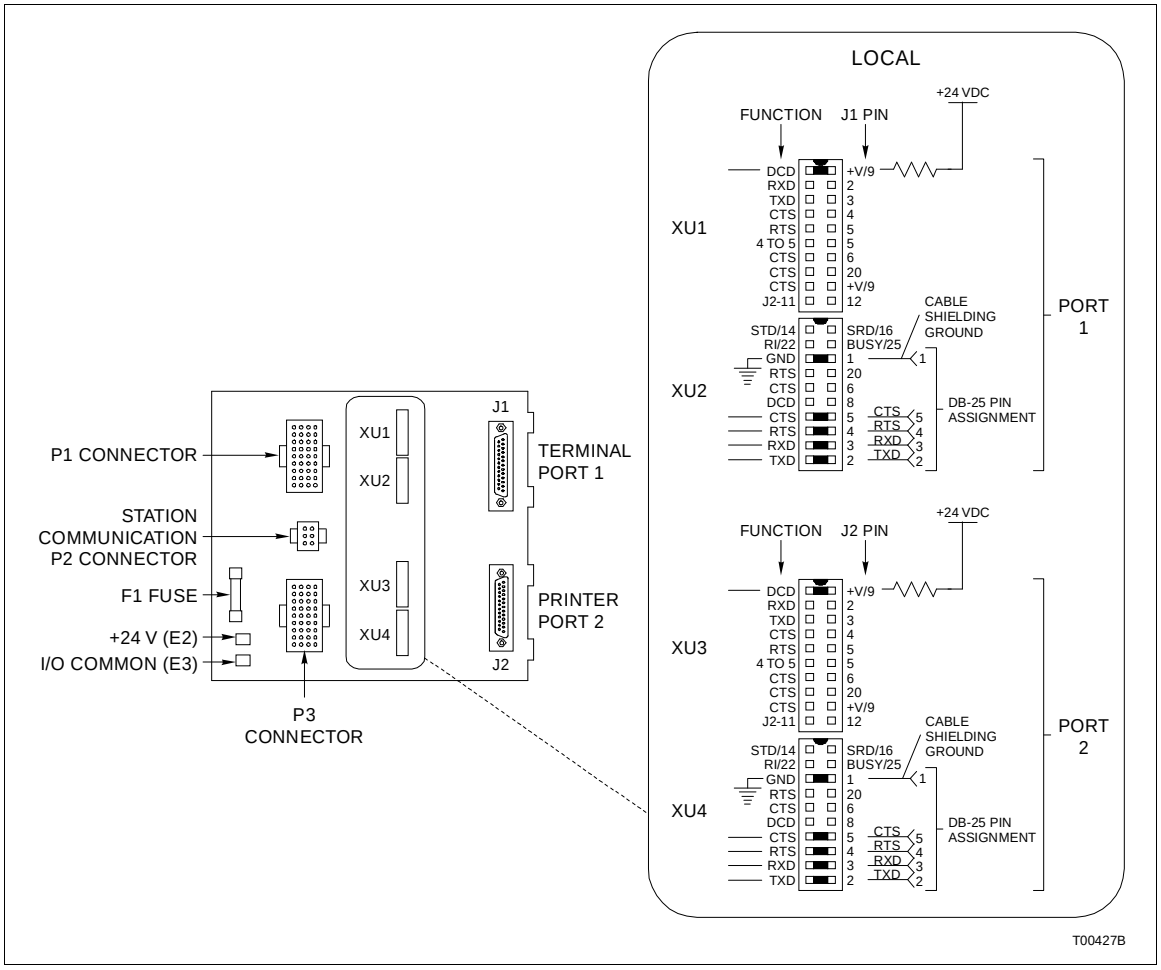

Figure 2-7. Dipshunt Configuration for Direct Connection of Local PPT Module Acting as DTE

2. Install the RS-232-C cable to the DB-25 connector on the termination unit marked J1 for port 1. Connect the other end of the RS-232-C cable to the external device.

3. Install the RS-232-C cable to the DB-25 connector on the termination unit marked J2 for port 2. Connect the other end of the RS-232-C cable to the external device.

Serial Extension Cable

The serial extension cable connects the TMF termination unit to the NTCS04 termination unit. Refer to Table 2-1 for specific information about the NKSE01/11 cable. The diagram in Fig-

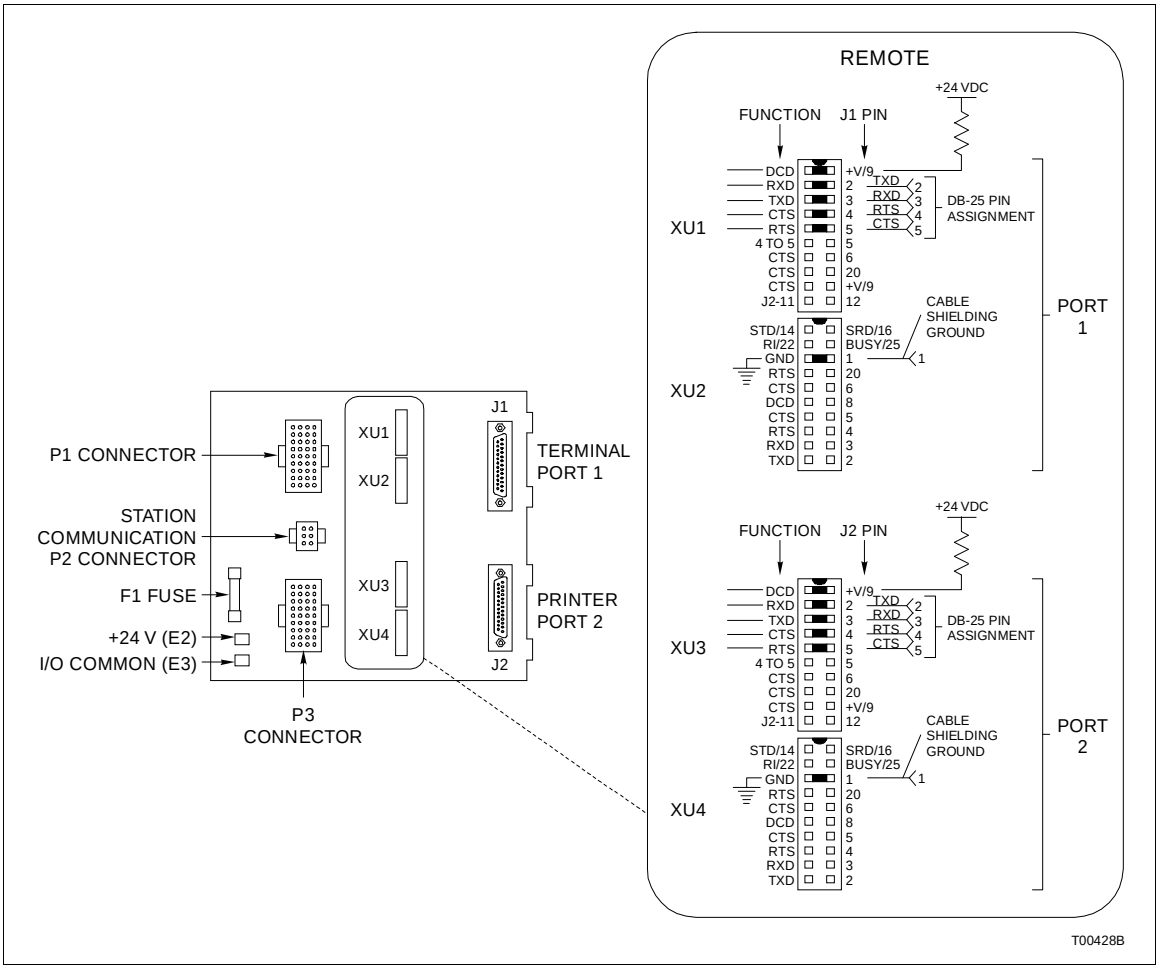

Figure 2-8. Dipshunt Configuration for Direct Connection of Remote PPT Module Acting as DCE

ure 2-13 shows how the NKSE01/11 cable connects the TMF termination unit to the TCS unit. To install the serial extension cable:

NOTE: The connectors on this cable are keyed and should easily snap into place when properly aligned with the connector sockets on each circuit board.

1. Connect one end of the serial extension cable to P2 on the TMF unit.

2. Connect the other end of this cable to P4 or P5 on the TCS unit.

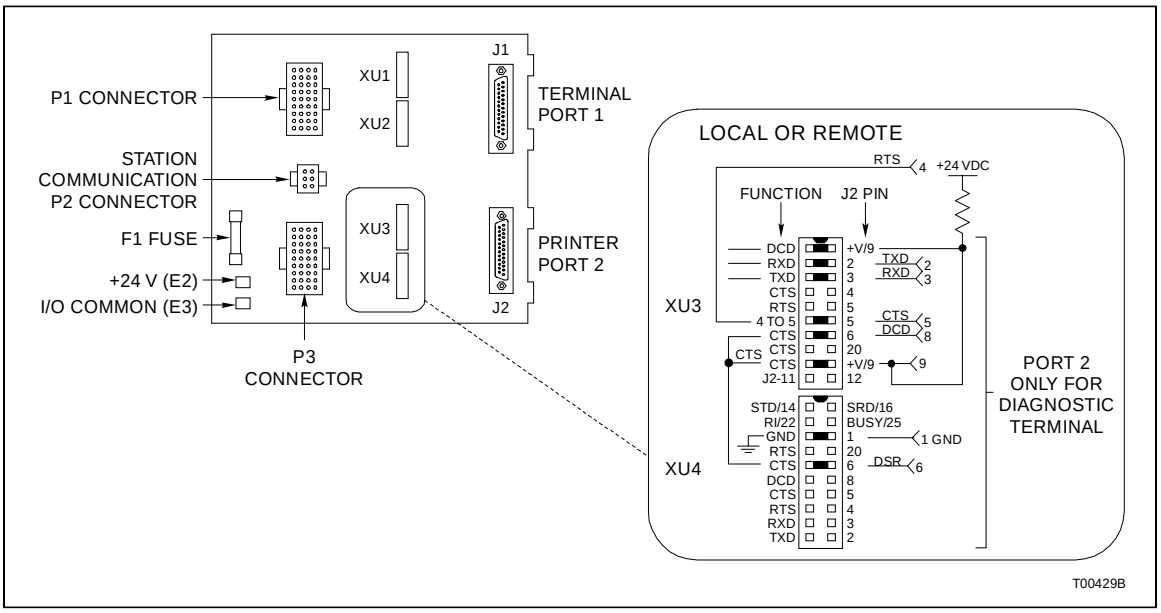

Figure 2-9. Dipshunt Configuration for Diagnostic Terminal (PPT Module)

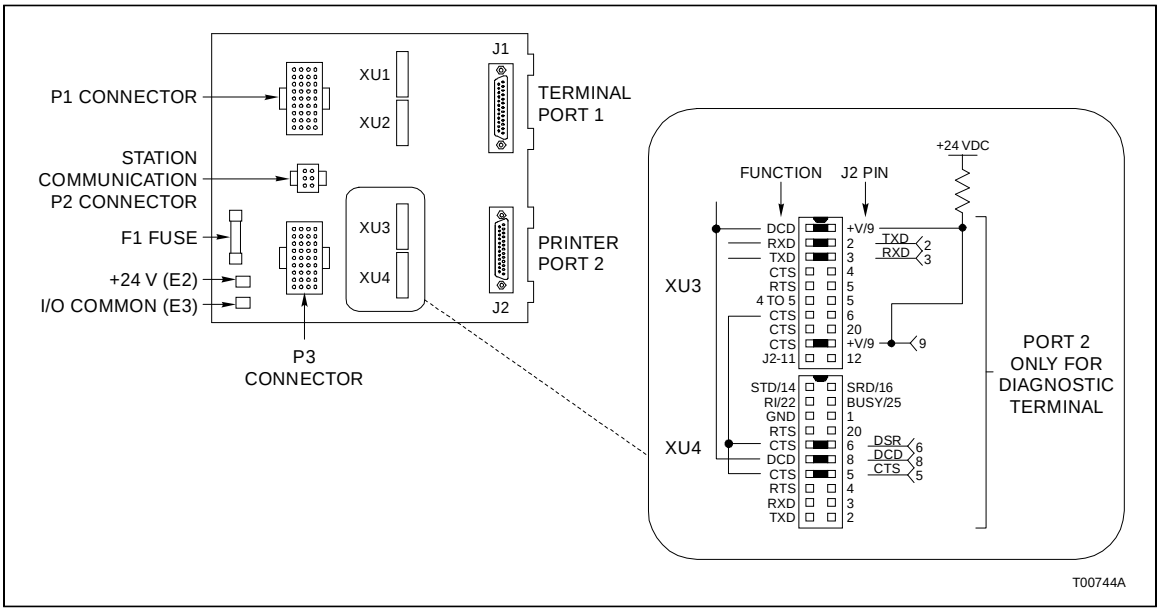

Figure 2-10. Dipshunt Configuration for Rochester 3800 and ESA Control SER-740

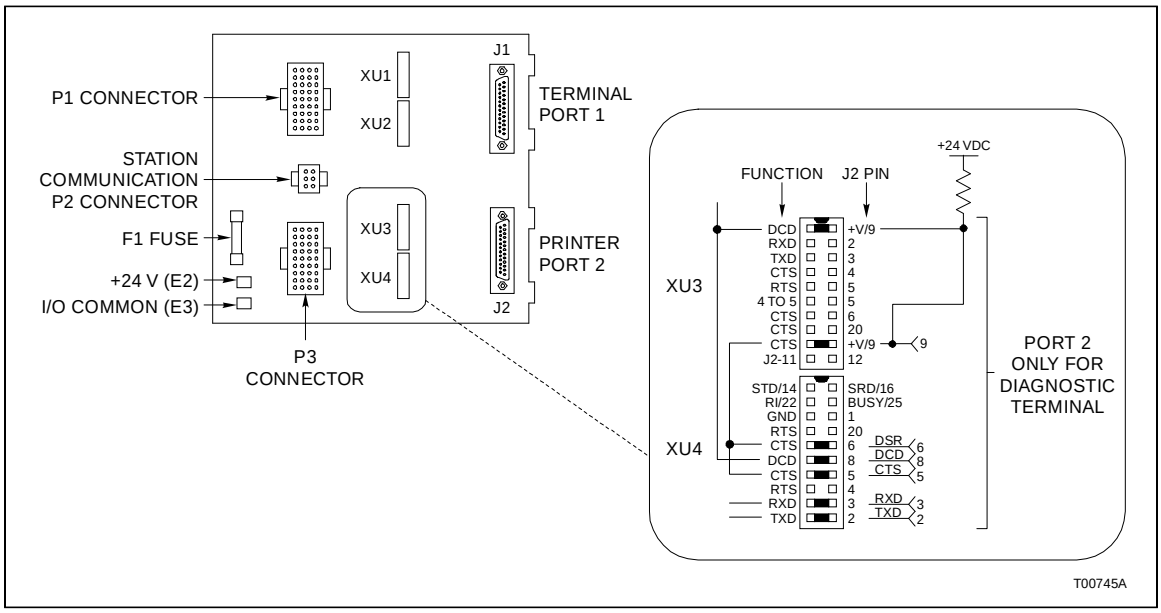

Figure 2-11. Dipshunt Configuration for Rochester ISM

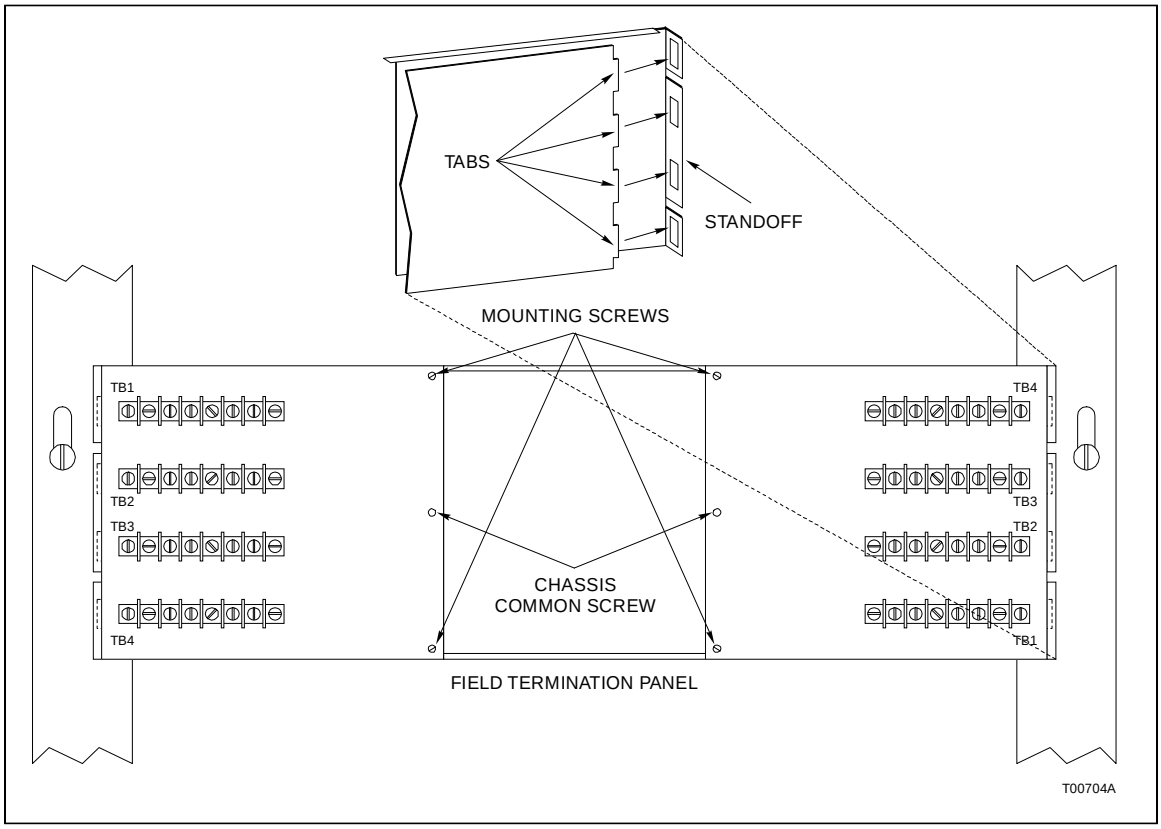

Figure 2-12. Mounting and Securing the Termination Unit on the Field Termination Panel

Table 2-1. TMF Cable Applications, Connections and Length Requirements

Cable	Connections				Maximum Length Meters (Feet)
	From		To		
	Device	Connector	Device	Connector	
HCBL01	DCE or DTE device	DB-25	NTMP01	P5 or P6	15 (50)[1]
NKSE01 or NKSE11	NTMF01	P2	NTCS04	P4 or P5	61 (200)
NKTU01 or NKTU11	NTMF01	P1	Primary module	P3	61 (200)
		P3	Redundant module		

NOTE:

1. The specified maximum length only applies to the HCBL01 cable. The performance of INFI 90 modules does not place a restriction on the maximum length of the RS-232-C cable. Follow industry-wide accepted RS-232-C practices and rules when selecting a suitable RS-232-C cable for your system.

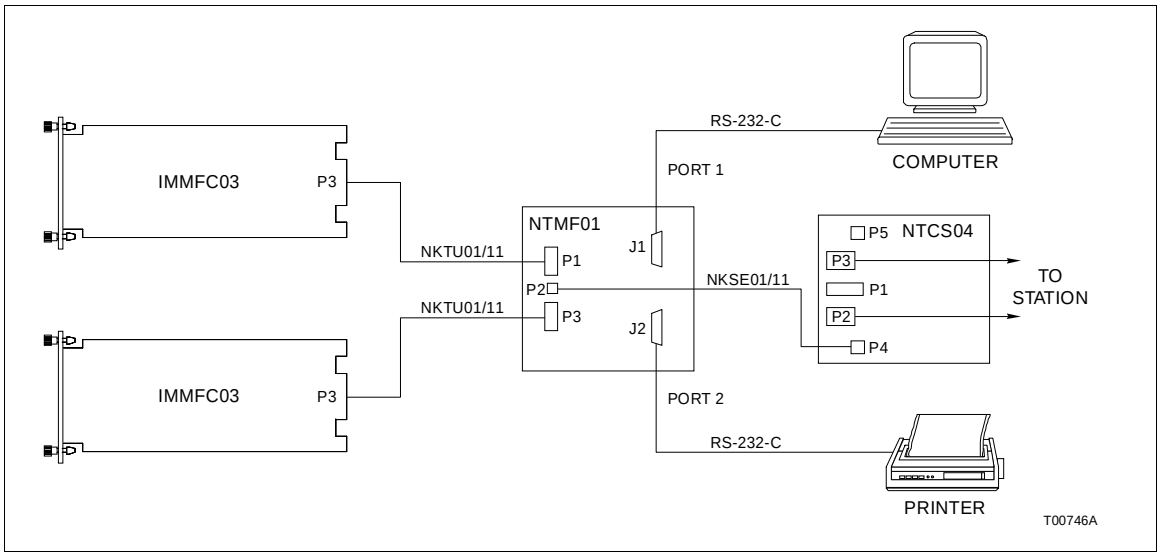

Figure 2-13. Cable Connections with Redundant MFC Modules, Serial Link to a Station and Serial Ports

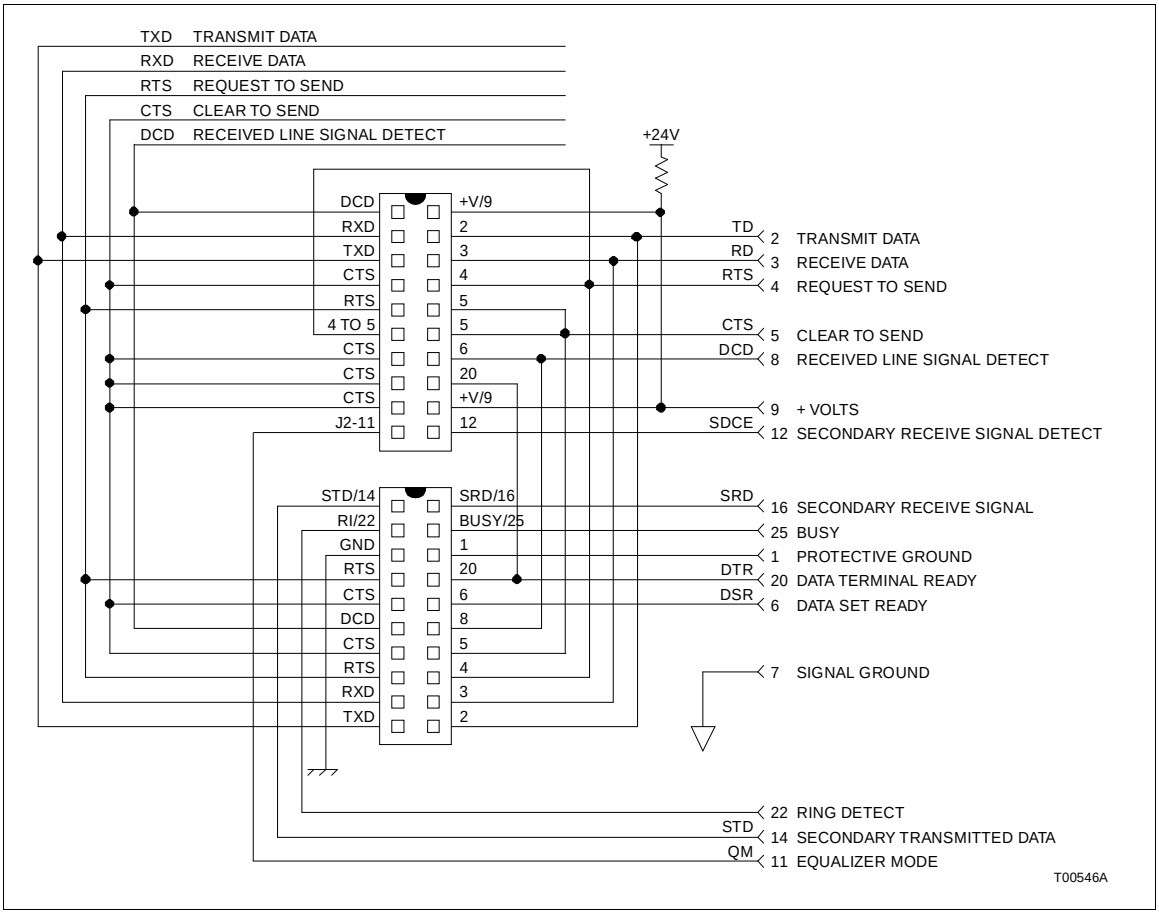

Figure 2-14. DB-25 Pin Assignments and RS-232-C Signals

POWER WIRING

CAUTION	**We strongly recommend that you turn cabinet power off before doing any termination unit wiring. Failure to do so could result in equipment damage. Do not apply power until you verify all wire connections.**
ATTENTION	**Il est fortement recommande, de debrancher l'alimentation electrique du cabinet avant d'effectuer toute connexion aux cartes de raccordement du chassis. Des dommages aux equipements pourraient survenir dans le cas contraire. Ne pas rebrancher l'alimentation avant que toutes les connexions aient ete verifiees.**

There is one faston (E2) that connects to +24 VDC and one faston (E3) that connects to I/O common. Figure 2-1 shows their locations on the TMF circuit board.

To connect power to the termination unit in a system using modular power supplies:

1. Attach a 14 AWG wire from a source of +24 VDC within the cabinet to the E2 faston on the termination unit.

2. Attach a 14 AWG wire from the I/O common bus bar at the bottom of the cabinet to the E3 faston of the termination unit.

The NTMF01 termination unit is ready for operation if:

1. The fuse is installed.

2. The dipshunts are installed for the correct communication application.

3. The circuit board is mounted on the field termination panel.

4. All required cables are connected to the termination unit.

5. Power is connected and applied to the termination unit.

SECTION 3 - MAINTENANCE

INTRODUCTION

The NTMF01 Multi-Function Controller Termination Unit requires limited maintenance. This section contains a maintenance schedule.

MAINTENANCE SCHEDULE

Execute the tasks in Table 3-1 at the specified intervals.

Table 3-1. Maintenance Schedule

Task	Interval
Clean and tighten all power and field wiring connections.	Every 6 months or during plant shutdown, whichever occurs first.
Use a static safe vacuum cleaner to remove dust from: Termination units. Field termination panel.	

SECTION 4 - REPAIR/REPLACEMENT PROCEDURES

INTRODUCTION

Repair procedures are limited to fuse and termination unit replacement. If the NTMF01 Multi-Function Controller Termination Unit fails, remove it and replace it with another one.

FUSE REPLACEMENT

If the fuse (F1) opens, replace it with a fuse having an equivalent rating. Table 4-1 describes the fuse and lists its Bailey part number. To replace a fuse:

1. Turn off power to the cabinet.
2. Remove the blown fuse from its holder (F1).
3. Replace the blown fuse with a 0.25 amp fuse.
4. Turn on power to the cabinet.

Table 4-1. Recommended Spare Parts List

Description	Part Number
Fuse, 0.25 A, 250 V	194776A12500

TERMINATION UNIT REPLACEMENT

CAUTION	**Remove modules from their assigned module mounting unit slots before installing or removing a cable connected to that slot. Failure to do so could result in damage to the module.**
ATTENTION	**Retirer le module de son emplacement dans le chassis de montage des modules avant d'installer ou de retirer un cable assigne a cet emplacement. Un manquement a cette procedure pourrait endommager le module.**

If you determine that the termination unit is faulty, replace it with a new one. ***Do not*** try to repair the unit; replacing components may affect the unit performance and certification. When replacing a termination unit, observe the special handling guidelines listed in Section 2.

NOTE: Turn off power to the field device before removing the RS-232-C cables from the TMF unit.

Follow steps one through 16 to replace the termination unit.

1. If possible, turn off power to the cabinet, then disconnect the +24 VDC and I/O common wiring from the E2 and E3 faston connectors of the termination unit. Mark the cables according to their terminal assignments as you remove them.

2. If there is a serial extension cable (station link) connected, disconnect it from the P2 connector on the termination unit.

3. Remove the RS-232-C cables from the DB-25 connectors on the termination unit. Mark the cables according to their connector assignments as you remove them.

4. Verify that any master module connected to the termination unit has been pulled out of its cable connection on the module mounting unit (MMU) backplane.

5. Remove the termination unit cables from the P1 and P3 connectors on the termination unit. Mark the cables according to their connector assignments as you remove them.

6. >When all the cables are removed from the termination unit, remove the 2 mounting screws and the chassis ground screw with star washer at E1 and remove the termination unit from the field termination panel.

7. Verify that the dipshunt settings on the replacement termination unit are the same as the dipshunt settings on the faulty termination unit.

8. Insert the tabs of the replacement termination unit into its slot on the field termination panel as shown in Figure<N>2-9 and slide the circuit board into position.

9. Secure the termination unit circuit board to the field termination panel with the 2 mounting screws and chassis grounding screw (E1). Be sure to use the star washer with the grounding screw.

10. Connect the termination unit cables to their assigned connectors on the termination unit.

11. Connect the RS-232-C cables to their assigned DB-25 connectors on the termination unit.

12. If applicable, connect the serial extension cable to P2 on the termination unit.

13. Connect the +24 VDC and common wiring to the E2 and E3 faston connectors of the termination unit.

14. Push on the faceplate of the master module to fully insert it into its module mounting unit slot. The module should be seated in the termination unit cable at the rear of the MMU card cage when fully inserted.

15. After all the cables have been replaced, return power to the computer, modem or diagnostic terminal.

16. Return power to the cabinet if it was off during the replacement procedure.

SECTION 5 - SUPPORT SERVICES

INTRODUCTION

Bailey Controls Company is ready to help in the use, application and repair of its products. Contact the nearest sales office to make requests for sales, applications, installation, repair, overhaul and maintenance contract services.

REPLACEMENT PARTS AND ORDERING INFORMATION

When making repairs, order replacement parts from a Bailey Controls Company sales office. Provide this information:

1. Part description, part number and quantity.

2. Model and serial numbers (if applicable).

3. Bailey instruction manual number, page number and reference figure that identifies the part.

Order parts without commercial descriptions from the nearest Bailey Controls Company sales office.

TRAINING

Bailey Controls Company has a modern training facility available for training your personnel. On-site training is also available. Contact a Bailey Controls Company sales office for specific information and scheduling.

TECHNICAL DOCUMENTATION

Additional copies of this manual, or other Bailey Controls Company manuals, can be obtained from the nearest Bailey Controls Company sales office at a reasonable charge.

APPENDIX A - IMMFC03 MULTI-FUNCTION CONTROLLER

INTRODUCTION

Several dipswitches must be set for the IMMFC03 Multi-Function Controller Module. The IMMFC03 module consists of two circuit boards: a memory board and a CPU board. The memory board has no user configurable operating options. The CPU board has three dipswitches that set the module operating characteristics. Figure A-1 shows the CPU board layout. Tables A-1, A-2, A-3, and A-4 explain the dipswitch settings for the CPU board. For more information on the module, refer to the ***IMMFC03 Multi-Function Controller Module*** product instruction.

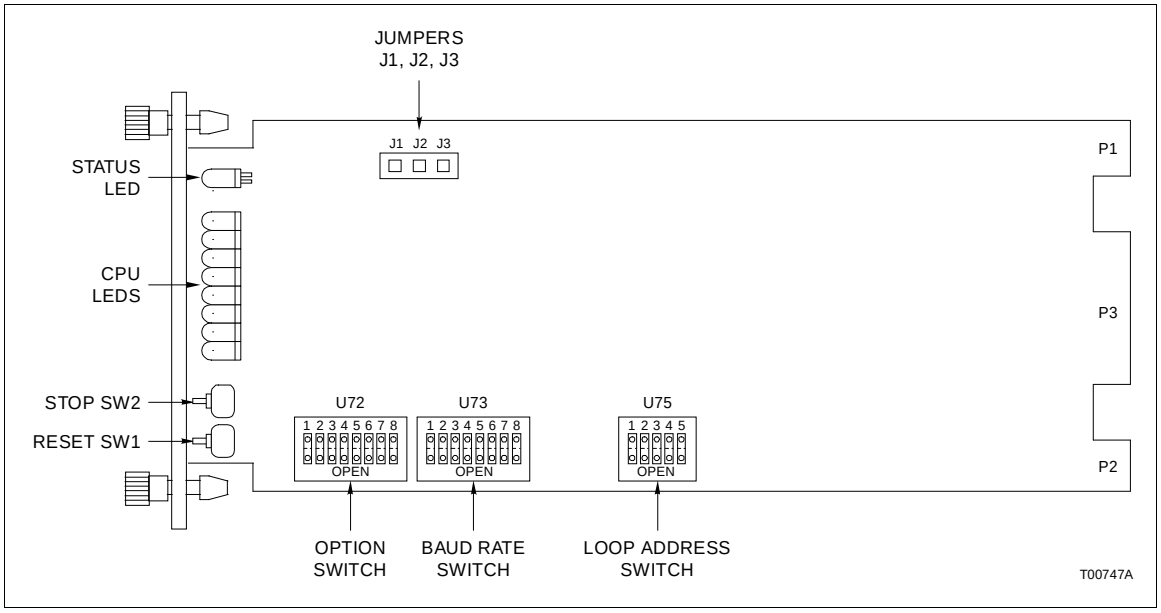

Figure A-1. IMMFC03 Module CPU Board Layout

Table A-1. IMMFC03 Dipswitch U72 Option Settings

Position	Setting	Function
1	0	Normal operation.
	1	Enable special operations (refer to Table A-2).
2	0	Disable on-line configuration.
	1	Enable on-line configuration.
3	0	Perform ROM checksum routine.
	1	Inhibit ROM checksum routine.
4	0	Not used.
5	0	Perform ROM check.
	1	Inhibit ROM (CPU board) check.

Table A-1. IMMFC03 Dipswitch U72 Option Settings (continued)

Position	Setting	Function
6	0	Normal operation.
	1	Compact configuration - moves configured blocks to the top of NVRAM while moving free space to the bottom (this is known as compacting). Leave switch OPEN and insert module into MMU. When front panel LEDs 1,, 2 and 4 are ON,, remove the module,, put the switch in the CLOSED position and insert the module. The MFC goes into the configure mode and compacts the configuration.
7	0	Normal operation.
	1	Initialize NVRAM (erase configuration) - leave switch OPEN and insert the module into the MMU. When front panel LEDs 1,, 2 and 4 are ON,, remove the module,, put the switch in the CLOSED position and insert the module. The module is now ready to be configured. This switch must be CLOSED for normal operation.
8	0	Primary MFC module.
	1	Redundant MFC module.

NOTE: 0 = CLOSED or ON, 1 = OPEN or OFF.

Table A-2. IMMFC03 Dipswitch U72 Special Operation Settings

Special Operation	Dipswitch Position 1	2	3	4	5	6	7	8	Description
0	0	0	0	0	0	0	0	0	Force module to configure mode.
1	1	0	0	0	0	0	0	1	Reserved for future use. If you use this setting,, your module may not operate properly.
2	1	0	0	0	0	0	1	0	Initialize NVRAM configuration space.
3	1	0	0	0	0	0	1	1	Reserved. Do not use. If you use this setting,, your module may not operate properly.
4	1	0	0	0	0	1	0	0	INFI-NET protocol enable. This allows the MFC module to take advantage of INFI-NET/<R> Superloop capabilities.
5	1	1	0	1	0	0	0	0	Permit segment modification (allows change to segment scheme configured with function code<N>82,, specification S1).
6	1	0	1	1	0	0	0	0	Enable time-stamping. This operation instructs the MFC to generate time information with point data. It is applicable only to INFI-NET/ Superloop systems.

NOTE: 0 = CLOSED or ON, 1 = OPEN or OFF.

Table A-3. IMMFC03 Dipswitch U73 Baud Rate Settings

Baud Rate	Switch Position								Baud Rate	Switch Position							
	Terminal Port 1				Printer Port 2					Terminal Port 1				Printer Port 2			
	1	2	3	4	5	6	7	8		1	2	3	4	5	6	7	8
	0	0	0	0	0	0	0	0	1800.0	0	0	0	1	0	0	0	1
50.0	1	0	0	0	1	0	0	0	2000.0	1	0	0	1	1	0	0	1
110.0	0	1	0	0	0	1	0	0	2400.0	0	1	0	1	0	1	0	1
134.5	1	1	0	0	1	1	0	0	3600.0	1	1	0	1	1	1	0	1
150.0	0	0	1	0	0	0	1	0	4800.0	0	0	1	1	0	0	1	1
300.0	1	0	1	0	1	0	1	0	7200.0	1	0	1	1	1	0	1	1
600.0	0	1	1	0	0	1	1	0	9600.0	0	1	1	1	0	1	1	1
1200.0	1	1	1	0	1	1	1	0	19200.0	1	1	1	1	1	1	1	1

NOTE: 0 = CLOSED or ON,, 1 = OPEN or OFF.

Table A-4. Example IMMFC03 Dipswitch U75 Module Address Settings

Address Example	Dipswitch Position (Binary Value)				
	1	2	3	4	5
	(16)	(8)	(4)	(2)	(1)
7	0	0	1	1	1
15	0	1	1	1	1
31	1	1	1	1	1

NOTE: 0 = CLOSED or ON, 1 = OPEN or OFF.

APPENDIX B - IMMFC04 MULTI-FUNCTION CONTROLLER

INTRODUCTION

Several dipswitches must be set for the IMMFC04 Multi-Function Controller. Figure B-1 shows the IMMFC04 module layout. Tables B-1, B-2, and B-3 explain the dipswitch settings for the board. For more information on the module, refer to the ***IMMFC04 Multi-Function Controller Module*** product instruction.

NOTE: Jumpers J17 through J22 are factory set (jumper pins one and two) and should not be changed. Jumpers J23 and J24 are reserved for future use. The positions of J23 and J24 do not affect module operation.

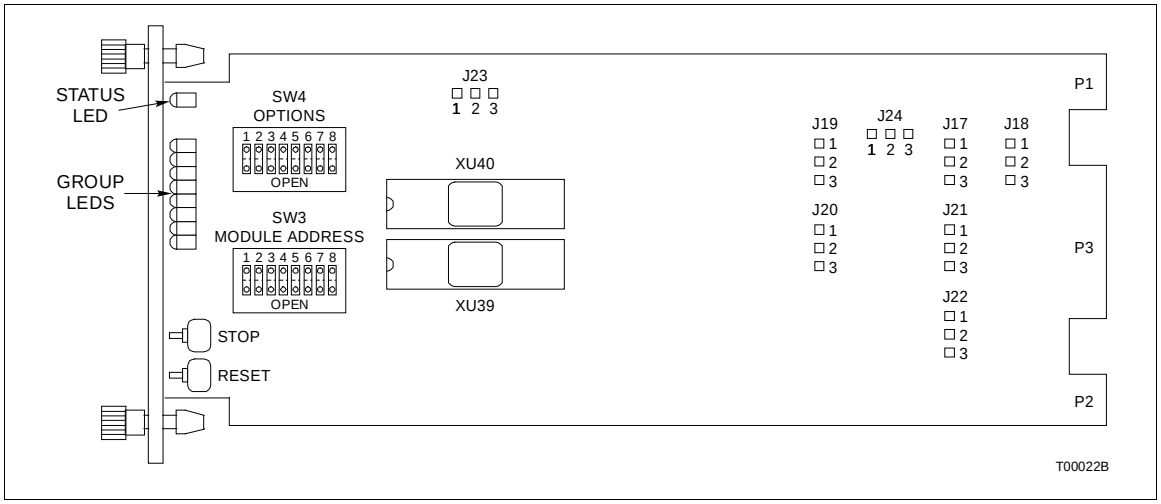

Figure B-1. IMMFC04 Module Layout

Table B-1. IMMFC04 Dipswitch SW3 Module Address Settings

Address Example	Dipswitch Position (Binary Value)							
	1[1]	2[2]	3[3]	4	5	6	7	8
	(128)	(64)	(32)	(16)	(8)	(4)	(2)	(1)
7	1	Y	X	0	0	1	1	1
15	1	Y	X	0	1	1	1	1
31	1	Y	X	1	1	1	1	1

NOTE: 0 = CLOSED or ON, 1 = OPEN or OFF.

1. Position 1 must be set open for proper operation.
2. Y = 0 for normal execution mode, 1 for diagnostic mode.
3. X= Not important.

Table B-2. IMMFC04 Dipswitch SW4 Options Settings

Position	Setting	Function
1	0	Normal operation.
	1	Enable special operations (refer to Table B-3).
2	0	Disable on-line configuration.
	1	Enable on-line configuration.
3	0	Not used.
4	0	Perform ROM checksum routine.
	1	Inhibit ROM checksum routine.
5	0	Perform ROM check.
	1	Inhibit ROM check.
6	0	Normal operation.
	1	Compact configuration - moves configured blocks to the top of NVRAM while moving free space to the bottom (this is known as compacting). Leave switch OPEN and insert module into MMU. When front panel LEDs 1, 2 and 4 are ON remove the module, put the switch in the CLOSED position and insert the module. The MFC goes into the configure mode and compacts the configuration.
7	0	Normal operation.
	1	Initialize NVRAM (erase configuration) - leave switch OPEN and insert the module into the MMU. When front panel LEDs 1, 2 and 4 are ON remove the module, put the switch in the CLOSED position and insert the module. The module is now ready to be configured. This switch must be CLOSED for normal operation.
8	0	Primary MFC module.
	1	Redundant MFC module.

NOTE: 0 = CLOSED or ON ,, 1 = OPEN or OFF.

Table B-3. IMMFC04 Dipswitch SW4 Special Operations Settings

Special Operation	Dipswitch Position 1	2	3	4	5	6	7	8	Description
0	0	0	0	0	0	0	0	0	Force module to configure mode.
1,	1	0	0	0	0	0	0	1	Reserved for future use. If you use this setting,, your module may not operate properly.
2	1	0	0	0	0	0	1	0	Initialize NVRAM configuration space.
3	1	0	0	0	0	0	1	1	Reserved. Do not use. If you use this setting, your module may not operate properly.
4	1	0	0	0	0	1	0	0	INFI-NET protocol enable. This allows the MFC module to take advantage of INFI-NET/Superloop capabilities.
5	1	1	0	1	0	0	0	0	Permit segment modification (allows change to segment scheme configured with function code 82, specification S1).
6	1	0	1	1	0	0	0	0	Enable time-stamping. This operation instructs the MFC to generate time information with point data. It is applicable only to INFI-NET/Superloop systems.

NOTE: 0 = CLOSED or ON,, 1 = OPEN or OFF.

APPENDIX C - IMMFC05 MULTI-FUNCTION CONTROLLER

INTRODUCTION

Several dipswitches must be set for the IMMFC05 Multi-Function Controller. Figure C-1 shows the IMMFC05 module layout. Tables C-1, C-2, and C-3 explain the dipswitch settings for the board. For more information on the module, refer to the ***IMMFC05 Multi-Function Controller Module*** product instruction.

NOTE: Jumpers J17 through J22 are factory set (jumper pins one and two) and should not be changed. Jumpers J23 and J24 are reserved for future use. The positions of J23 and J24 do not affect module operation.

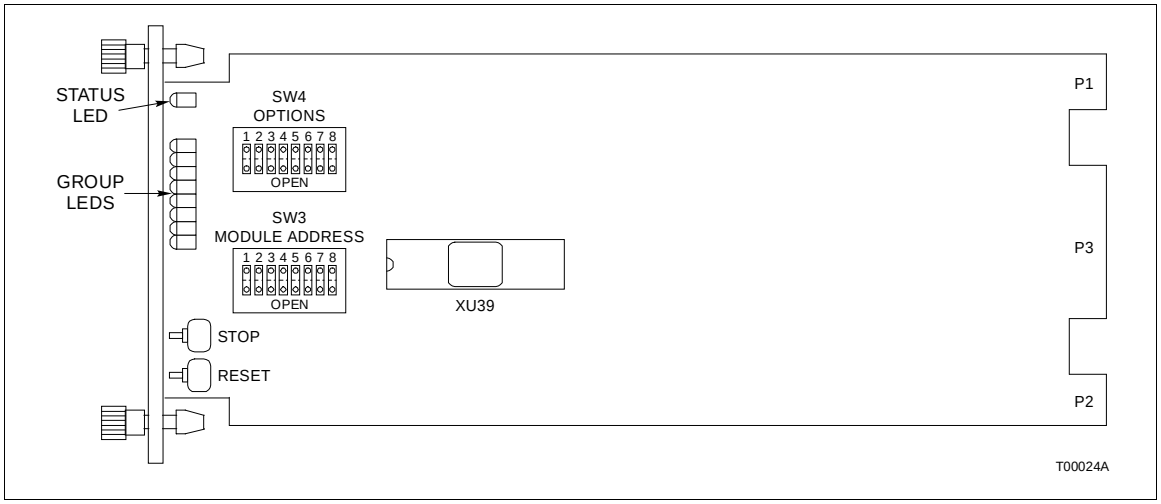

Figure C-1. IMMFC05 Module Layout

Table C-1. Example IMMFC05 Dipswitch SW3 Module Address Settings

Address Example	Dipswitch Position (Binary Value)							
	1[1] (128)	2[2] (64)	3[3] (32)	4 (16)	5 (8)	6 (4)	7 (2)	8 (1)
7	1	Y	X	0	0	1	1	1
15	1	Y	X	0	1	1	1	1
31	1	Y	X	1	1	1	1	1

NOTES: 0 = CLOSED or ON, 1 = OPEN or OFF.
1. Position 1 must be set open for proper operation.
2. Y = 0 for normal execution mode, 1 for diagnostic mode.
3. X = Not important.

Table C-2. IMMFC05 Dipswitch SW4 Option Settings

Position	Setting	Function
1	0	Normal operation.
	1	Enable special operations (refer to Table C-3).
2	0	Disable on-line configuration.
	1	Enable on-line configuration.
3	0	Not used.
4	0	Perform ROM checksum routine.
	1	Inhibit ROM checksum routine.
5	0	Perform ROM check.
	1	Inhibit ROM check.
6	0	Normal operation.
	1	Compact configuration - moves configured blocks to the top of NVRAM while moving free space to the bottom (this is known as compacting). Leave switch OPEN and insert module into MMU. When front panel LEDs 1,, 2 and 4 are ON,, remove the module,, put the switch in the CLOSED position and insert the module. The MFC goes into the configure mode and compacts the configuration.
7	0	Normal operation.
	1	Initialize NVRAM (erase configuration) - leave switch OPEN and insert the module into the MMU. When front panel LEDs 1,, 2 and 4 are ON,, remove the module,, put the switch in the CLOSED position and insert the module. The module is now ready to be configured. This switch must be CLOSED for normal operation.
8	0	Primary MFC module.
	1	Redundant MFC module.

NOTE: 0 = CLOSED or ON, 1 = OPEN or OFF.

Table C-3. IMMFC05 Dipswitch SW4 Special Operations Settings

Special Operation	Dipswitch Position 1	2	3	4	5	6	7	8	Description
0	0	0	0	0	0	0	0	0	Force module to configure mode.
1,	1	0	0	0	0	0	0	1	Reserved for future use. If you use this setting,, your module may not operate properly.
2	1	0	0	0	0	0	1	0	Initialize NVRAM configuration space.
3	1	0	0	0	0	0	1	1	Reserved. Do not use. If you use this setting, your module may not operate properly.
4	1	0	0	0	0	1	0	0	INFI-NET protocol enable. This allows the MFC module to take advantage of INFI-NET/Superloop capabilities.
5	1	1	0	1	0	0	0	0	Permit segment modification (allows change to segment scheme configured with function code 82, specification S1).
6	1	0	1	1	0	0	0	0	Enable time-stamping. This operation instructs the MFC to generate time information with point data. It is applicable only to INFI-NET/Superloop systems.

NOTE: 0 = CLOSED or ON,, 1 = OPEN or OFF.

APPENDIX D - INPPT01 PLANT LOOP TO PLANT LOOP TRANSFER MODULE

INTRODUCTION

Several dipswitches must be set for the INPPT01 Plant Loop to Plant Loop Transfer Module. The INPPT01 module consists of two circuit boards: a memory board and a CPU board. The memory board has no user configurable operating options. The CPU board has three dipswitches that set the module operating characteristics. Figure D-1 shows the CPU board layout. Tables D-1, D-2, and D-3 explain the dipswitch settings for the CPU board. For more information on the module, refer to the ***INPPR01 Plant Loop to Plant Loop Remote Interface*** product instruction.

NOTE: Jumpers J1 through J3 are factory set. Do not change the jumper settings.

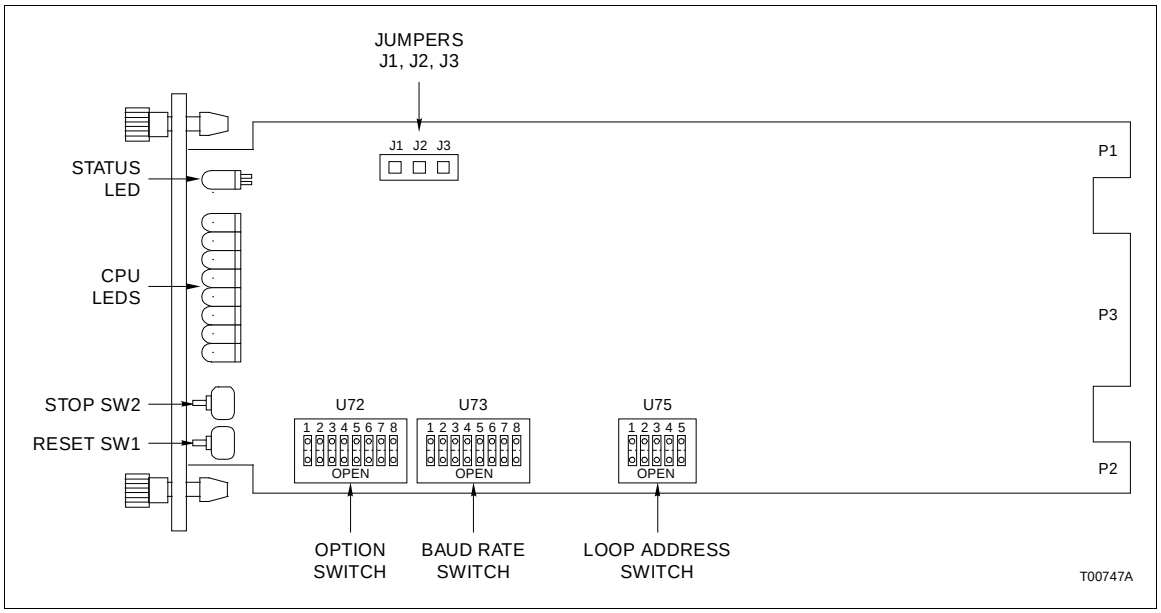

Figure D-1. INPPT01 Module CPU Board Layout

Table D-1. INPPT01 Dipswitch U72 Option Settings

Position	Setting	Function
1	0	ROM checksumming enabled.
	1	ROM checksumming disabled.
2	0	RS-232-C port in DCE mode (direct connections).
	1	RS-232-C port in DTE mode (modem connections).

Table D-1. INPPT01 Dipswitch U72 Option Settings (continued)

Position	Setting	Function
3	0	Equipment select output de-energized.
	1	Equipment select output energized. A unique equipment select output can exist between the primary and secondary PPT module. The equipment select output is digital output 3 of a digital slave (IMDSM05 or IMDSO01/02/03/04 module).
4	0	Port 2 option interface communication.
	1	Port 2 utility option. Port 2 responds as DCE when it is configured as a utility port. Set switch position 4 = 1 if port 2 is not used as a communication interface.
5	0	Interface ID local. Define only one interface as a local interface.
	1	Interface ID remote.
6	0	Interface mode two-way control. The following conditions apply: 1. The port 2 option defaults to interface communication (position 4 = 0). 2. The local INPPR01 interface uses port 1 as its command port and port 2 as its reply port. 3. The remote INPPR01 interface uses port 2 as its command port and port1 as its reply port. 4. Both the local and remote interface must have a loop address of 0 (U75).
	1	Interface mode one-way control.
7	0	Do not initialize NVRAM.
	1	Initialize NVRAM.
8	0	Primary module.
	1	Redundant module.

NOTE: 0 = CLOSED or ON, 1 = OPEN or OFF.

Table D-2. INPPT01 Dipswitch U73 Baud Rate Settings

Baud Rate	Switch Position								Baud Rate	Switch Position							
	Terminal Port 1				Printer Port 2					Terminal Port 1				Printer Port 2			
	1	2	3	4	5	6	7	8		1	2	3	4	5	6	7	8
50.0	0	0	0	0	0	0	0	0	1800.0	0	0	0	1	0	0	0	1
75.0	1	0	0	0	1	0	0	0	2000.0	1	0	0	1	1	0	0	1
110.0	0	1	0	0	0	1	0	0	2400.0	0	0	0	0	0	1	0	1
134.5	1	1	0	0	1	1	0	0	3600.0	1	1	0	1	1	1	0	1
150.0	0	0	1	0	0	0	1	0	4800.0	0	0	1	1	0	0	1	1
300.0	1	0	1	0	1	0	1	0	7200.0	1	0	1	1	1	0	1	1
600.0	0	1	1	0	0	1	1	0	9600.0	0	1	1	1	0	1	1	1
1200.0	1	1	1	0	1	1	1	0	19200.0	1	1	1	1	1	1	1	1

NOTE: 0 = CLOSED or ON, 1 = OPEN or OFF.

Table D-3. Example INPPT01 Dipswitch U75 Loop Address Settings

Address Example	Dipswitch Position (Binary Value)				
	1 (16)	2 (8)	3 (4)	4 (2)	5 (1)
7	0	0	1	1	1
15	0	1	1	1	1
31	1	1	1	1	1

NOTE: 0 = CLOSED or ON, 1 = OPEN or OFF.

APPENDIX E - INPCT01 PLANT LOOP TO COMPUTER TRANSFER MODULE

INTRODUCTION

Several dipswitches must be set for the INPCT01 Plant Loop to Computer Transfer Module. The INPCT01 module consists of two circuit boards: a memory board and a CPU board. The memory board has no user configurable operating options. The CPU board has three dipswitches that set the module operating characteristics. Figure E-1 shows the CPU board layout. Tables E-1, E-2, and E-3 explain the dipswitch settings for the CPU board. For more information on the module, refer to the ***INPCI02 Plant Loop to Computer Interface*** product instruction.

NOTE: Jumpers J1 through J3 are factory set. Do not change the jumper settings.

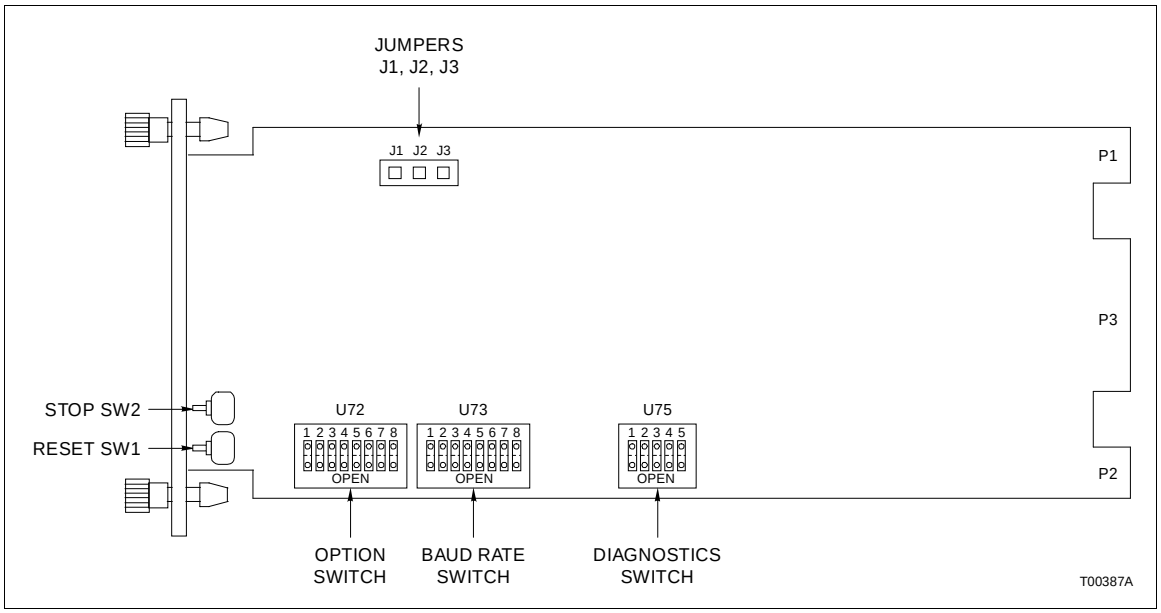

Figure E-1. INPCT01 Module CPU Board Layout

Table E-1. NIPCT01 Dipswitch U72 Option Settings

Position	Setting	Function
1	0	ROM checksumming enabled.
	1	ROM checksumming disabled.
2/3		Ports 1 and 2 data characteristics.
	0/0	8 data bits, 1 stop bit, no parity.
	0/1	8 data bits, 1 stop bit, even parity.
2/3 (cont.)	1/0	8 data bits, 1 stop bit, odd parity.
	1/1	8 data bits, 2 stop bits, no parity.

Table E-1. NIPCT01 Dipswitch U72 Option Settings (continued)

Position	Setting	Function
4	0	Port 2 option serial port to host.
	1	Port 2 utility option. If this option is selected, port 1 data characteristics are automatically set to 8 data bits, 1 stop bit, no parity. Otherwise, port 2 data characteristics are set by dipswitch positions 2 and 3.
5	0	Modem password protection disabled.
	1	Modem password protection enabled.
6	0	Port addressing mode disabled.
	1	Port addressing mode enabled. When this option is enabled,, the PCT module will expect all commands from the host to send the port address selected on the dipswitch U75 as the first character of each command.
7	0	Checksumming option disabled.
	1	Checksumming option enabled. When this option is enabled,, the PCT module will expect all commands from the host to include a checksum byte as the last character before the carriage return. The PCT module includes a checksum in each reply.
8	N/A	This dipswitch position is undefined.

NOTE: 0 = CLOSED or ON,, 1 = OPEN or OFF.

Table E-2. INPCT01 Dipswitch U73 Baud Rate Settings

Baud Rate	Switch Position		Baud Rate	Switch Position	
	Terminal Port 1	Printer Port 2		Terminal Port 1	Printer Port 2
	1 2 3 4	5 6 7 8		1 2 3 4	5 6 7 8
50.0	0 0 0 0	0 0 0 0	1800.0	0 0 0 1	0 0 0 1
75.0	1 0 0 0	1 0 0 0	2000.0	1 0 0 1	1 0 0 1
110.0	0 1 0 0	0 1 0 0	2400.0	0 0 0 0	0 1 0 1
134.5	1 1 0 0	1 1 0 0	3600.0	1 1 0 1	1 1 0 1
150.0	0 0 1 0	0 0 1 0	4800.0	0 0 1 1	0 0 1 1
300.0	1 0 1 0	1 0 1 0	7200.0	1 0 1 1	1 0 1 1
600.0	0 1 1 0	0 1 1 0	9600.0	0 1 1 1	0 1 1 1
1200.0	1 1 1 0	1 1 1 0	19200.0	1 1 1 1	1 1 1 1

NOTE: 0 = CLOSED or ON, 1 = OPEN or OFF.

Table E-3. Example INPCT01 Dipswitch U75 Loop Address Settings

Address Example	Dipswitch Position (Binary Value)				
	1 (16)	2 (8)	3 (4)	4 (2)	5 (1)
7	0	0	1	1	1
15	0	1	1	1	1
31	1	1	1	1	1

NOTE: 0 = CLOSED or ON, 1 = OPEN or OFF.

APPENDIX F - INICT01 INFI-NET TO COMPUTER TRANSFER MODULE

INTRODUCTION

Several dipswitches must be set for the INICT01 INFI-NET to Computer Transfer Module. The INICT01 module consists of two circuit boards: a memory board and a CPU board. The memory board has no user configurable operating options. The CPU board has three dipswitches that set the module operating characteristics. Figure F-1 shows the CPU board layout. Tables F-1, F-2, and F-3 explain the dipswitch settings for the CPU board. For more information on the module, refer to the ***INFI-NET Communication Modules*** product instruction.

NOTE: Jumpers J1 through J3 are factory set. Do not change the jumper settings.

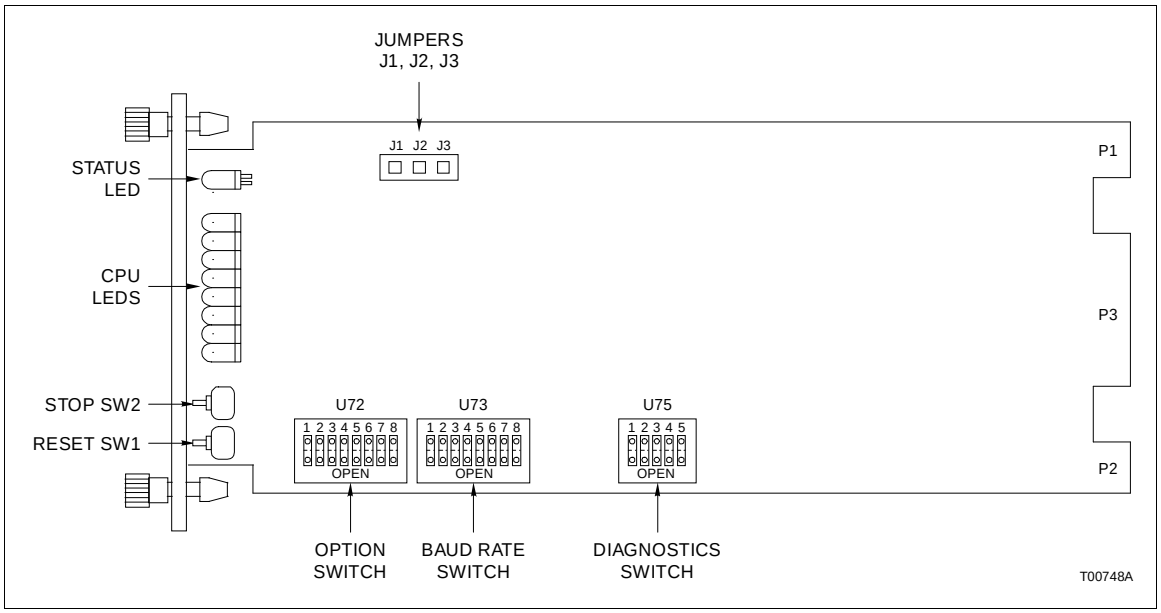

Figure F-1. INPCT01 Module CPU Board Layout

Table F-1. INICT01 Dipswitch U72 Option Settings

Position	Setting	Function
1	0	ROM checksumming enabled.
	1	ROM checksumming disabled.
2/3		Ports 1 and 2 data characteristics.
	0/0	8 data bits, 1 stop bit, no parity.
	0/1	8 data bits, 1 stop bit, even parity.
2/3 (cont.)	1/0	8 data bits, 1 stop bit, odd parity.
	1/1	8 data bits, 2 stop bits, no parity.

Table F-1. INICT01 Dipswitch U72 Option Settings (continued)

Position	Setting	Function
4	0	Port 2 option serial port to host.
	1	Port 2 utility option. If this option is selected, port 1 data characteristics are automatically set to 8 data bits, 1 stop bit, no parity. Otherwise, port 2 data characteristics are set by dipswitch positions 2 and 3.
5	0	Modem password protection disabled.
	1	Modem password protection enabled.
6	0	Port addressing mode disabled.
	1	Port addressing mode enabled. When this option is enabled,, the ICT module will expect all commands from the host to send the port address configured through the UTILITIES as the first character of each command.
7	0	Checksumming option disabled.
	1	Checksumming option enabled. When this option is enabled,, the ICT module will expect all commands from the host to include a checksum byte as the last character before the carriage return. The ICT module includes a checksum in each reply.
8	N/A	Not used.

NOTE: 0 = CLOSED or ON, 1 = OPEN or OFF.

Table F-2. INICT01 Dipswitch U73 Baud Rate Settings

Baud Rate	Switch Position		Baud Rate	Switch Position	
	Terminal Port 1	Printer Port 2		Terminal Port 1	Printer Port 2
	1 2 3 4	5 6 7 8		1 2 3 4	5 6 7 8
50.0	0 0 0 0	0 0 0 0	1800.0	0 0 0 1	0 0 0 1
75.0	1 0 0 0	1 0 0 0	2000.0	1 0 0 1	1 0 0 1
110.0	0 1 0 0	0 1 0 0	2400.0	0 0 0 0	0 1 0 1
134.5	1 1 0 0	1 1 0 0	3600.0	1 1 0 1	1 1 0 1
150.0	0 0 1 0	0 0 1 0	4800.0	0 0 1 1	0 0 1 1
300.0	1 0 1 0	1 0 1 0	7200.0	1 0 1 1	1 0 1 1
600.0	0 1 1 0	0 1 1 0	9600.0	0 1 1 1	0 1 1 1
1200.0	1 1 1 0	1 1 1 0	19200.0	1 1 1 1	1 1 1 1

NOTE: 0 = CLOSED or ON, 1 = OPEN or OFF.

Table F-3. INICT01 Dipswitch U75 Diagnostic Settings

Position	Setting	Function
1	0	NIS handshake time-out enabled.
	1	NIS handshake time-out disabled.
2	0	NIS diagnostic disabled.
	1	NIS diagnostic enabled.
3	0	INFI-NET diagnostic utilities disabled.
	1	INFI-NET diagnostic utilities enabled.
4/5	0	Not used.

NOTE:0 = CLOSED or ON, 1 = OPEN or OFF.

Index

A

Application
- Plant Loop to Computer 1-2
- Plant Loop to Plant Loop 1-3
- Redundant unit 1-1

Assignments
- DB-25 pin 2-14

C

Cable
- Applications 2-13
- Connections 2-13
- Installation 2-6
  - RS-232-C 2-8
  - Serial extension 2-9
- Length 2-13

Connector Assignments 2-3

D

Devices 2-2

Dipshunt configuration
- DCE 2-3
- Diagnostic terminal 2-6, 2-11
- Direct connection of local PPT module 2-9
- Direct connection ofremote PPT module 2-10
- Direct connection to host computer 2-4
- Direct connection to mainframe computer 2-7
- Direct connection to modem 2-5
- DTE 2-3
- ESA Control SER-740 2-11
- INPPT01 2-3
- Mainframe computer 2-3
- PPT module acting as DTE 2-8
- Rochester 3800 2-11
- Rochester ISM 2-12

Dipshunt locations 2-3

Dipswitch settings
- IMMFC03
  - U72 ..... A-1
  - U73 ..... A-3
  - U75 ..... A-3
- IMMFC04
  - SW3 ..... B-1
  - SW4 ..... B-2
- IMMFC05
  - SW3 ..... C-1
  - SW4 ..... C-2
- INPCT01
  - U72 ..... E-1
- INPPT01
  - U72 ..... D-1
  - U73 ..... D-2
  - U75 ..... D-3

F

Features 1-3

G

Glossary 1-4

H

Hardware application 1-3

How to use this manual 1-4

I

INICT01 INFI-NET to computer transfer module F-1

INPCT01 Plant Loop to computer transfer module E-1

INPPT01 Plant Loop to Plant Loop transfer module D-1

Inspection 2-2

Installation 2-1
- Cables 2-6
- Fuse 2-5
- Physical 2-2
- Setup 2-2
- Termination unit 2-5

Instruction content 1-4

Intended user 1-3

Introduction 1-1

L

Layout
- IMMFC03 ..... A-1
- IMMFC04 ..... B-1
- IMMFC05 ..... C-1
- INICT01 ..... F-1
- INPCT01 ..... E-1
- INPPT01 ..... D-1

Index (continued)

M

Maintenance 3-1
  Schedule 3-1
Mounting and securing the termination unit 2-12
Mounting the termination unit 2-6
Multi-function controller
  IMMFC03 ..... A-1
  IMMFC04 ..... B-1
  IMMFC05 ..... C-1

N

Nomenclature 1-5

O

Overview 1-1

R

Recommended spare parts list 4-1
Reference documents 1-5
Repair 4-1
Replacement 4-1
  Fuse 4-1
  Parts and ordering information 5-1
  Termination unit 4-1
RS-232-C signals 2-14

S

Sequential events recorder 2-4
Special handling 2-1
Specifications 1-6
Suport services 5-1

T

Technical documentatoin 5-1
Terminals 2-2
Training 5-1

U

Unpacking 2-2

W

Wiring 2-14

Visit Elsag Bailey on the World Wide Web at http://www.bailey.com

Our worldwide staff of professionals is ready to meet *your* needs for process automation.
For the location nearest you, please contact the appropriate regional office.

AMERICAS
29801 Euclid Avenue
Wickliffe, Ohio USA 44092
Telephone 1-216-585-8500
Telefax 1-216-585-8756

ASIA/PACIFIC
152 Beach Road
Gateway East #20-04
Singapore 189721
Telephone 65-391-0800
Telefax 65-292-9011

EUROPE, AFRICA, MIDDLE EAST
Via Puccini 2
16154 Genoa, Italy
Telephone 39-10-6582-943
Telefax 39-10-6582-941

GERMANY
Graefstrasse 97
D-60487 Frankfurt Main
Germany
Telephone 49-69-799-0
Telefax 49-69-799-2406

Form I-E96-427B Litho in U.S.A. 493

Copyright © 1993 by Elsag Bailey Process Automation, As An Unpublished Work
® Registered Trademark of Elsag Bailey Process Automation
™ Trademark of Elsag Bailey Process Automation